Vol. 2

REPLACEMENT PART CATALOG FOR

VINTAGE JEEP® VEHICLES

Quality Replacement Parts
Crown
Est. 1963
For Jeep® Vehicles

Jeep® is a registered trademark of Chrysler Group LLC.
Crown Automotive Sales Co., Inc. is not affiliated with Chrysler Group LLC.

Crown Automotive Sales Co., Inc. is not affiliated with Chrysler Group, LLC.

Jeep® is a registered trademark of Chrysler Group, LLC.

Cherokee™, Wagoneer™, Grand Wagoneer™, Willys™, Commando™, Jeepster™, Wrangler™, Grand Cherokee™, Comanche™, Liberty™, Commander™ Compass™, and Patriot™ are trademarks of Chrysler Group, LLC.

Part numbers listed in this catalog are used for reference purposes only. No implication is made that the actual products sold are the product of the original equipment manufacturer.

Reference to a manufacturer in the catalog does not indicate that the manufacturer is the source or sponsor of the listed product. All products listed in this catalog are being sold without any sponsorship or approval of any auto manufacturer.

This catalog is intended for fast reference use. While every effort has been made to insure correctness of the applications listed, we cannot guarantee accuracy due to many model changes and supersedence of part numbers. Crown Automotive Sales Co., Inc. makes no representation as to the dimensions, assemblies and/or calculations herein, and we will not be liable to any third party should any of the information contained within this catalog be in error.

www.CrownAutomotive.net

www.facebook.com/crownautomotive

Copyright ©2014 Crown Automotive Sales Co. Inc. All rights reserved

TABLE OF CONTENTS

Vehicle Identification Chart A-1

Axle 1-1

Clutch 2-1

Cooling 3-1

Body 4-1

Electrical 5-1

Fuel 6-1

Engine 7-1

Brake 8-1

Heat & Air Conditioning 9-1

Exhaust 10-1

Steering 11-1

Suspension 12-1

Wiper 13-1

Manual Transmission 14-1

Tranfer Case 15-1

RT Off-Road Accessories & Upgrades 16-1

Copyright © 2013 Crown Automotive Sales Co., Inc. All rights reserved.

MB - 1941 to 1945

Quick ID Features:
9-Slot Grille
No Tailgate
2-Piece Windshield

Technical Specifications

Wheelbase:	80”
Engine:	4-134 L-Head Go Devil
Manual Transmission:	T84 3-Speed
Transfer Case:	Dana 18
Front Axle:	Dana 25
Rear Axle:	Dana 27

CJ-2A - 1945 to 1949

Quick ID Features:
7-Slot Grille
Tailgate
2-Piece Windshield

Technical Specifications

Wheelbase:	80”
Engine:	4-134 L-Head Go Devil
Manual Transmission:	T90 3-Speed
Transfer Case:	Dana 18
Front Axle:	Dana 25
Rear Axle:	Dana 41

CJ-3A - 1948 to 1953

Quick ID Features:
7-Slot Grille
Tailgate
1-Piece Windshield

Technical Specifications

Wheelbase:	80”
Engine:	4-134 L-Head Go Devil
Manual Transmission:	T90 3-Speed
Transfer Case:	Dana 18
Front Axle:	Dana 25
Rear Axle:	Dana 44

CJ-3B - 1953 to 1968

Quick ID Features:
7-Slot Grille
1-Piece Windshield
10-1/2” Tall Hood
(Fender to Top of Hood)

Technical Specifications

Wheelbase:	80”
Engine:	4-134 F-Head Hurricane
Manual Transmission:	T90 3-Speed, T98 4-Speed
Transfer Case:	Dana 18
Front Axle:	Dana 25 (1953-65), Dana 27 (1966-68)
Rear Axle:	Dana 44

Copyright © 2014 Crown Automotive Sales Co., Inc. All rights reserved.

CJ-5 - 1955 to 1983

Quick ID Features:
7-Slot Grille
1-Piece Windshield
Rounded Fenders

Technical Specifications
Wheelbase: 81" (1955-71)
83.5" (1972-83)

Engine:
4-134 F-Head Hurricane (1955-71)
Buick Dauntless V6-225 (1966-71)
AMC 3.8L (S6-232) (1966-78)
AMC 4.2L (S6-258) (1971-83)
AMC 5.0L (V8-304) (1971-81)
GM 2.5L (S4-151) (1980-83)
AMC 2.5L (S4-150) (1983)

Manual Transmission:

T4	4-Speed (1982-83)
T5	5-Speed (1982-83)
T14	3-Speed (1967-72)
T15	3-Speed (1971-75)
T18	4-Speed (1966-83)
T86	3-Speed (1966-67)
T90	3-Speed (1955-71)
T150	3-Speed (1976-79)
T98	4-Speed (1955-72)
T176	4-Speed (1980-83)
T177	4-Speed (1980-83)
SR4	4-Speed (1980-83)

Transfer Case:
Dana 18 (1955-71)
Dana 20 (1972-79)
Dana 300 (1980-83)

Front Axle:
Dana 25 (1955-65)
Dana 27 (1966-71)
Dana 30 (1972-83)

Rear Axle:
Dana 44 (1955-75)
AMC 20 (1976-83)

CJ-6 - 1955 to 1975

Quick ID Features:
7-Slot Grille
1-Piece Windshield
Rounded Fenders
Extended Wheelbase & Body

Technical Specifications
Wheelbase: 101" (1955-71)
104"(1972-75)

Engine:
4-134 F-Head Hurricane (1955-71)
Buick Dauntless V6-225 (1966-71)
AMC 3.8L (S6-232) (1966-78)
AMC 4.2L (S6-258) (1971-83)
AMC 5.0L (V8-304) (1971-81)

Manual Transmission:

T14	3-Speed (1967-72)
T15	3-Speed (1971-75)
T18	4-Speed (1966-75)
T86	3-Speed (1966-67)
T90	3-Speed (1955-71)
T98	4-Speed (1955-72)

Transfer Case:
Dana 18 (1955-71)
Dana 20 (1972-75)

Front Axle:
Dana 25 (1955-65)
Dana 27 (1966-71)
Dana 30 (1972-85)

Rear Axle: Dana 44

Copyright © 2014 Crown Automotive Sales Co., Inc. All rights reserved.

CJ-7 - 1976 to 1986

Quick ID Features:
7-Slot Grille
Rounded Fenders
Wide Door Opening

Technical Specifications
Wheelbase: 93.5"

Engine:
AMC 3.8L (S6-232) (1976-78)
AMC 4.2L (S6-258) (1976-86)
AMC 5.0L (V8-304) (1976-81)
GM 2.5L (S4-151) (1980-83)
AMC 2.5L (S4-150) (1983-86)

Manual Transmission:

T150	3-Speed (1976-79)
T4	4-Speed (1982-86)
T5	5-Speed (1982-86)
T18	4-Speed (1966-84)
T176	4-Speed (1980-86)
T177	4-Speed (1980-86)
SR4	4-Speed (1980-83)
AX4	4-Speed (1984-86)
AX5	5-Speed (1984-86)

Transfer Case:
Dana 20 (1972-79)
Borg Warner 1305 (1976-79)
Borg Warner 1339 (1976-79)
Dana 300 (1980-86)

Front Axle:
Dana 30 (1976-86)

Rear Axle:
AMC 20 (1976-86)
Dana 44 (1986)

CJ-8 - 1981 to 1986

Quick ID Features:
7-Slot Grille
Rounded Fenders
Wide Door Opening
Pickup Truck Style

Technical Specifications
Wheelbase: 103.5”

Engine:
AMC 4.2L (S6-258) (1981-86)
AMC 5.0L (V8-304) (1981)
GM 2.5L (S4-151) (1981-83)
AMC 2.5L (S4-150) (1983-86)

Manual Transmission:

T4	4-Speed (1982-86)
T5	5-Speed (1982-86)
T18	4-Speed (1981-84)
T176	4-Speed (1981-86)
T177	4-Speed (1981-86)
SR4	4-Speed (1981-83)
AX4	4-Speed (1984-86)
AX5	5-Speed (1984-86)

Transfer Case:
Dana 300 (1981-86)

Front Axle:
Dana 30 (1981-86)

Rear Axle:
AMC 20 (1981-86)
Dana 44 (1986)

Copyright © 2014 Crown Automotive Sales Co., Inc. All rights reserved.

VJ Jeepster - 1948 to 1950

Quick ID Features:
10-Slot Pointed Grille
Convertible
2 Wheel Drive

Technical Specifications
Wheelbase: 101”

Engine:
4-134 L-Head Go Devil (1948-49)
4-134 F-Head Hurricane (1950)
L6-148 (1948)
F6-151 (1950)

Manual Transmission:
T96 3-Speed

Rear Axle:
Dana 23

M38 - 1950-1952

Quick ID Features:
7-Slot Grille
1-Piece Windshield
Bottom-Mounted Windshield Wipers

Technical Specifications
Wheelbase: 80”

Engine:
4-134 L-Head Go Devil

Manual Transmission:
T90 3-Speed

Transfer Case:
Dana 18

Front Axle:
Dana 25

Rear Axle:
Dana 44

M38-A1 - 1952-1963

Quick ID Features:
7-Slot Grille
2-Piece Windshield
Top-Mounted Windshield Wipers

Technical Specifications
Wheelbase: 80”

Engine:
4-134 F-Head Hurricane

Manual Transmission:
T90 3-Speed
T98 4-Speed (1955-63)

Transfer Case:
Dana 18

Front Axle:
Dana 25

Rear Axle:
Dana 44

Copyright © 2014 Crown Automotive Sales Co., Inc. All rights reserved.

Willys Pickup - 1947 to 1965

Quick ID Features:
Pointed 8-Slot Grille
Rounded Fenders
2-Piece Windshield

Technical Specifications
Wheelbase: 118”

Engine:
4-134 L-Head Go Devil (1947-50)
4-134 F-Head Hurricane (1950-54)
S6-226 Super Hurricane (1954-62)
S6-230 (1962-65)

Manual Transmission:
T90 3-Speed

Transfer Case:
Dana 18

Front Axle:
Dana 25 (1947-65)
Dana 27 (1961-65)

Rear Axle:
Dana 44 (1947-54)
Dana 53 (1950-65)

Willys Sedan Delivery - 1948 to 1963

Quick ID Features:
Pointed 8-Slot Grille
Rounded Fenders
2-Piece Windshield

Technical Specifications
Wheelbase: 104.5”

Engine:
4-134 L-Head Go Devil (1948-53)
4-134 F-Head Hurricane (1950-55)
S6-226 Super Hurricane (1954-63)

Manual Transmission:
T90 3-Speed
T96 3-Speed

Transfer Case:
Dana 18

Front Axle:
Dana 25

Rear Axle:
Dana 23

Willys Station Wagon - 1946 to 1964

Quick ID Features:
Pointed 8-Slot Grille
Rounded Fenders
2-Piece Windshield

Technical Specifications
Wheelbase: 104.5”

Engine:
4-134 L-Head Go Devil (1946-53)
4-134 F-Head Hurricane (1950-55)
L6-148 (1948-49)
F6-161 (1950-55)
S6-226 Super Hurricane (1954-64)

Manual Transmission:
T90 3-Speed
T96 3-Speed

Transfer Case:
Dana 18 (1949-64)

Front Axle:
Dana 25 (1949-64)

Rear Axle:
Dana 23
Dana 44

Copyright © 2014 Crown Automotive Sales Co., Inc. All rights reserved.

Full Size Jeep (SJ) 1963 to 1991

Quick ID Features:
2 or 4-Doors
Full-Bodied
Fold-Down Tailgate

Technical Specifications
Wheelbase: 109”

Engine:
S6-230 (1962-65)
AMC 5.4L (V8-327) (1965-67)
Buick 5.7L (V8-350) (1968-70)
AMC 3.8L (S6-232) (1965-79)
AMC 4.2L (S6-258) (1971-86)
AMC 5.9L (V8-360) (1970-91)
AMC 6.6L (V8-401) (1971-79)

Manual Transmission:
T5 5-Speed (1982-86)
T14 3-Speed (1967-72)
T15 3-Speed (1971-75)
T18 4-Speed (1966-84)
T85 3-Speed (1965-69)
T86 3-Speed (1966-67)
T90 3-Speed (1963-74)
T177 4-Speed (1980-86)

Transfer Case:
Dana 20 Borg Warner
BW1305 Borg Warner
BW1339
NP219
NP208
NP228
NP229

Front Axle:
Dana 27 (1963-70)
Dana 30 (1971-73)
Dana 44 (1971-91)

Rear Axle:
Dana 44

J-Series Pickup 1963 to 1988

Quick ID Features:
Cab forward very similar to SJ
Available in Short or Long Bed
Fold-Down Tailgate

Technical Specifications
Wheelbase: 116” or 131”

Engine:
S6-230 (1963-64)
AMC 5.4L (V8-327) (1965-67)
Buick 5.7L (V8-350) (1968-71)
AMC 3.8L (S6-232) (1965-70)
AMC 4.2L (S6-258) (1971-86)
AMC 5.9L (V8-360) (1970-88)
AMC 6.6L (V8-401) (1971-79)

Manual Transmission:
T14 3-Speed (1967-72)
T15 3-Speed (1971-75)
T18 4-Speed (1966-84)
T85 3-Speed (1965-69)
T86 3-Speed (1966-67)
T89 3-Speed (1960-66)
T90 3-Speed (1963-64)
T177 4-Speed (1980-86)

Transfer Case:
Dana 20
Borg Warner BW1305
Borg Warner BW1339
NP219
NP208
NP228

Front Axle:
Dana 27 (1963-70)
Dana 30 (1971-73)
Dana 44 (1971-91)

Rear Axle:
Dana 44
Dana 53 (1963-71)
Dana 60 (1969-83)

Copyright © 2014 Crown Automotive Sales Co., Inc. All rights reserved.

C101 Commando - 1966 to 1971

Quick ID Features:
7-Slot Grille
Rounded Fenders
Forward-Sloping Quarter Panels

Technical Specifications
Wheelbase: 101”

Engine:
4-134 F-Head Hurricane
Buick Dauntless V6-225

Manual Transmission:
T14 3-Speed (1967-71)
T18 4-Speed
T86 3-Speed (1966-67)
T90 3-Speed
T98 4-Speed

Transfer Case:
Dana 20

Front Axle:
Dana 27

Rear Axle:
Dana 30
Dana 44

C104 Commando - 1972 to 1973

Quick ID Features:
Full-Width Grille
Unique Hood
Forward-Sloping Quarter Panels

Technical Specifications
Wheelbase: 101”

Engine:
Buick Dauntless V6-225
AMC 4.2L (S6-258)
AMC 5.0L (V8-304)

Manual Transmission:
T14 3-Speed
T15 3-Speed

Transfer Case:
Dana 20

Front Axle:
Dana 30

Rear Axle:
Dana 44

FC-150 - 1956 to 1964

Quick ID Features:
Cab-Over Design
Curved Windshield
Various Beds Available

Technical Specifications
Wheelbase: 81”

Engine:
4-134 F-Head Hurricane

Manual Transmission:
T90 3-Speed
T98 4-Speed

Transfer Case:
Dana 18

Front Axle:
Dana 25

Rear Axle:
Dana 44
Dana 53

FC-170 - 1957 to 1964

Quick ID Features:
Cab-Over Design
Curved Windshield
Various Beds Available

Technical Specifications
Wheelbase: 103”

Engine:
S6-226 Super Hurricane

Manual Transmission:
T90 3-Speed
T98 4-Speed

Transfer Case:
Dana 18

Front Axle:
Dana 44

Rear Axle:
Dana 44
Dana 53
Dana 70

Copyright © 2014 Crown Automotive Sales Co., Inc. All rights reserved.

AXLE

FRONT AXLES

Dana 25 Front Axle 1-2

Dana 27 Front Axle 1-4

Dana 44 Front Axle 1-6

Dana 30 Front Axle 1-10

REAR AXLES

AMC 20 Rear Axle. 1-12

Dana 27 Rear Axle 1-16

Dana 30 Rear Axle. 1-18

Dana 44 Rear Axle w/ Flanged Axles 1-20

Dana 44 Rear Axle w/ Tapered Axles 1-24

Dana 53 Rear Axle 1-26

Dana 41 Rear Axle. 1-28

Dana 60 Rear Axle. 1-28

Copyright © 2014 Crown Automotive Sales Co., Inc. All rights reserved.

Dana 25 Front Axle

1941-65 MB, M38, M38-A1, CJ-2A, 3A, 3B, 5, 6
1949-65 FC-150, Willys Pickup, Sedan Delivery, Station Wagon

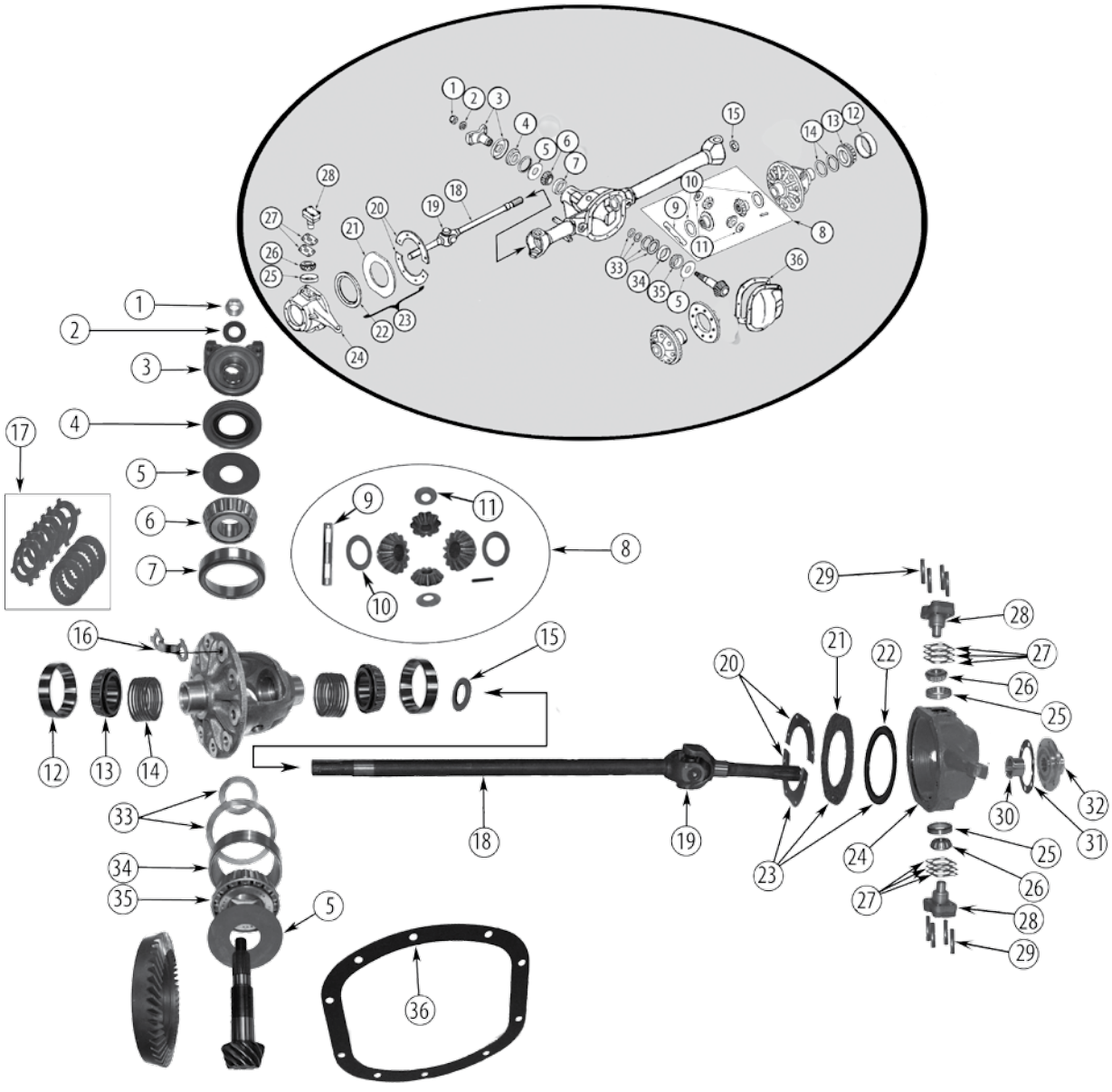

Copyright © 2014 Crown Automotive Sales Co., Inc. All rights reserved.

Dana 25 Front Axle

Item #	Description	Application	Comments	Replaces Part #
1	Nut, Pinion	All		J0801367
2	Washer, Pinion	All		J4004913
3	Yoke, Pinion	All	10 Splines w/ Slinger	A1445
4	Seal, Pinion	All		J0998092
5	Slinger, Pinion	All		J0636566
6	Bearing, Pinion	All	Outer	J0052878
7	Cup, Pinion Bearing	All	Outer	J0052879
8	Gear Set, Differential	All	Standard	J0926544
9	Shaft, Differential	All	Standard	JA000798
10	Washer, Differential Side Gear	All	Standard	JA000795
11	Washer, Differential Spider Gear	All	Standard	JA000797
12	Cup, Differential Bearing	All	2 Required	52881
13	Bearing, Differential	All	2 Required	J3105346
14	Shim Set, Differential	All		J0648061
15	Seal, Axle Shaft	All	Inner	JA000779
16	Strap, Ring & Pinion	All	Locks Ring Gear Bolts (4 per Differential)	A792
17	Clutch Disc Kit, Differential	All	Power-Lok	J8126153
18	Shaft, Axle, Spicer Type	All Except Pickup, SW, SD All Except Pickup, SW, SD	Left; 34-7/16" Long Right; 21-9/16" Long	909459 J0909460
19	U-Joint	All w/ Spicer Axle Shafts All w/ Spicer Axle Shafts	Greasable, Fitting in Body Greasable, Fitting in Outer Cap	J8136616 8126637BC
20	Retainer, Steering Knuckle	All	2 Required Per Knuckle	J0908006
21	Seal, Steering Knuckle	All	Felt	J0908005
22	Seal, Steering Knuckle	All	Rubber	J0909854
23	Seal Kit, Steering Knuckle	All All All	Less Hardware (One Side) With Hardware (One Side) Less Hardware (Two Sides)	J0915664 J0998445 J0908226
24	Knuckle, Steering	All Except MB, Early CJ-2A All Except MB, Early CJ-2A	Left Right	J0805783 J0805784
25	Cup, King Pin Bearing	All	Upper or Lower	J0052941
26	Bearing, King Pin	All	Upper or Lower	J0052940
27	Shim Kit, King Pin Bearing	All	Upper or Lower	JA006882
28	Cap, King Pin	All Except MB All	Upper Lower	J0910901 J0910901
29	Stud, King Pin	All	16 Required	J0643754
30	Bushing, Spindle	All w/ Rzeppa or Spicer Axles	Left or Right	J0649783
31	Flange, Axle Shaft	All	Left or Right	JA000868
32	Gasket, Axle Shaft Flange	All	Left or Right	J0649784
33	Shim Set, Pinion	All		J0649228
34	Cup, Pinion Bearing	All	Inner	J0052877
35	Bearing, Pinion	All	Inner	J0807266
36	Gasket, Differential Cover	All		J8120360
37	Kit, Pinion Bearing	All	Inner, Includes Cone & Cup	J8126499

Copyright © 2014 Crown Automotive Sales Co., Inc. All rights reserved.

Dana 27 Front Axle

1966-1971 CJ-3B, 5, 6, C101 Commando
1961-1970 SJ, J-Series, Willys Pickup

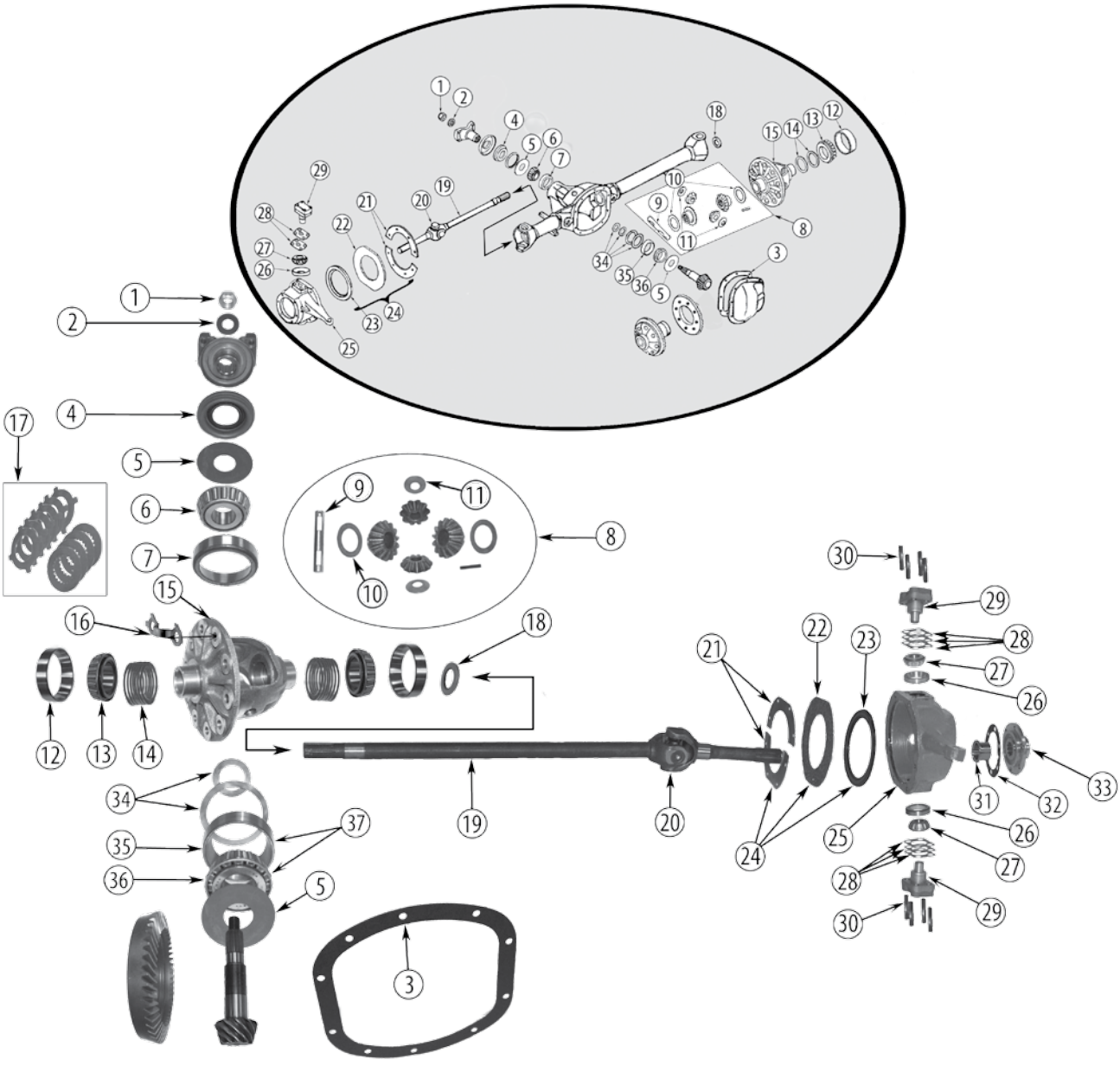

Copyright © 2014 Crown Automotive Sales Co., Inc. All rights reserved.

Dana 27 Front Axle

Item #	Description	Application	Comments	Replaces Part #
1	Nut, Pinion	All		J0801367
2	Washer, Pinion	All		J4004913
3	Gasket, Differential Cover	All		J8120360
4	Seal, Pinion	All		J0998092
5	Slinger, Pinion	All All	Inner Outer	J0636566 3893982
6	Bearing, Pinion	All	Outer	J052878
7	Cup, Pinion Bearing	All	Outer	J0052879
6 & 7	Kit, Pinion Bearing	All	Outer; Includes Cone & Cup	J8124052
8	Gear Kit, Differential	All	Standard	J0926544
9	Shaft, Differential	All	Standard	JA000798
10	Washer, Differential Side Gear	All	Standard	JA000795
11	Washer, Differential Spider Gear	All	Standard	JA000797
12	Cup, Differential Bearing	All	2 Required	J3157273
13	Bearing, Differential	All	2 Required	J3156052
14	Shim Set, Differential	All		J0648061
15	Case Only, Differential	All All	Standard; 3.73 & Down Standard; 3.92 & Up	934934* 926797*
16	Strap, Ring & Pinion	All	Locks Ring Gear Bolts (4 per Differential)	A792
17	Seal, Axle Shaft	All	Inner	JA000799
18	Clutch Disc Kit, Differential	All	Power-Lok	J8126153
19	Axle Shaft	CJ-3B, 5, 6, w/ Spicer Type CJ-3B, 5, 6, w/ Spicer Type	Left, 37-7/16" Long Right, 21-9/16" Long	909459 J0909460
20	U-Joint	All w/ Spicer Axles All w/ Spicer Axles	Greasable, Fitting in Body Greasable, Fitting in Outer Cap	J8136616 8126637BC
21	Retainer, Steering Knuckle	All	2 Required Per Knuckle	J0908006
22	Seal, Steering Knuckle	All	Felt	J0908005
23	Seal, Steering Knuckle	All	Rubber	J0909854
24	Seal Kit, Steering Knuckle	All All All	Less Hardware (One Side) With Hardware (One Side) Less Hardware (Two Sides)	J0915664 J0998445 J0908226
25	Knuckle, Steering	All Except C101 Commando All Except C101 Commando w/ 4-134 F-Head Engine, SJ, J-Series, Willys PU	Left Right	J0805783 J0805784
26	Cup, King Pin Bearing	All	Upper or Lower	J0052941
27	Bearing, King Pin	All	Upper or Lower	J0052940
28	Shim Kit, King Pin Bearing	All	Upper or Lower	JA006882
29	Cap, King Pin	All	Upper or Lower	J0910901
30	Stud, King Pin	All	16 Required	J0643754
31	Bushing, Axle Shaft Spindle	All w/ Rzeppa or Spicer Axles	Left or Right	J0649783
32	Gasket, Axle Shaft Flange	All	Left or Right	J0649784
33	Flange, Axle Shaft Drive	All	Left or Right	JA000868
34	Shim Set, Pinion	All		J0929408
35	Cup, Pinion Bearing	All	Inner	J3156065
36	Bearing, Pinion	All	Inner	J3156066
37	Kit, Pinion Bearing	All	Inner; Includes Cone & Cup	J8126499

* Not Currently Available

Copyright © 2014 Crown Automotive Sales Co., Inc. All rights reserved.

Dana 44 Front Axle

1971-1991 SJ, J-Series
1957-1964 FC-170

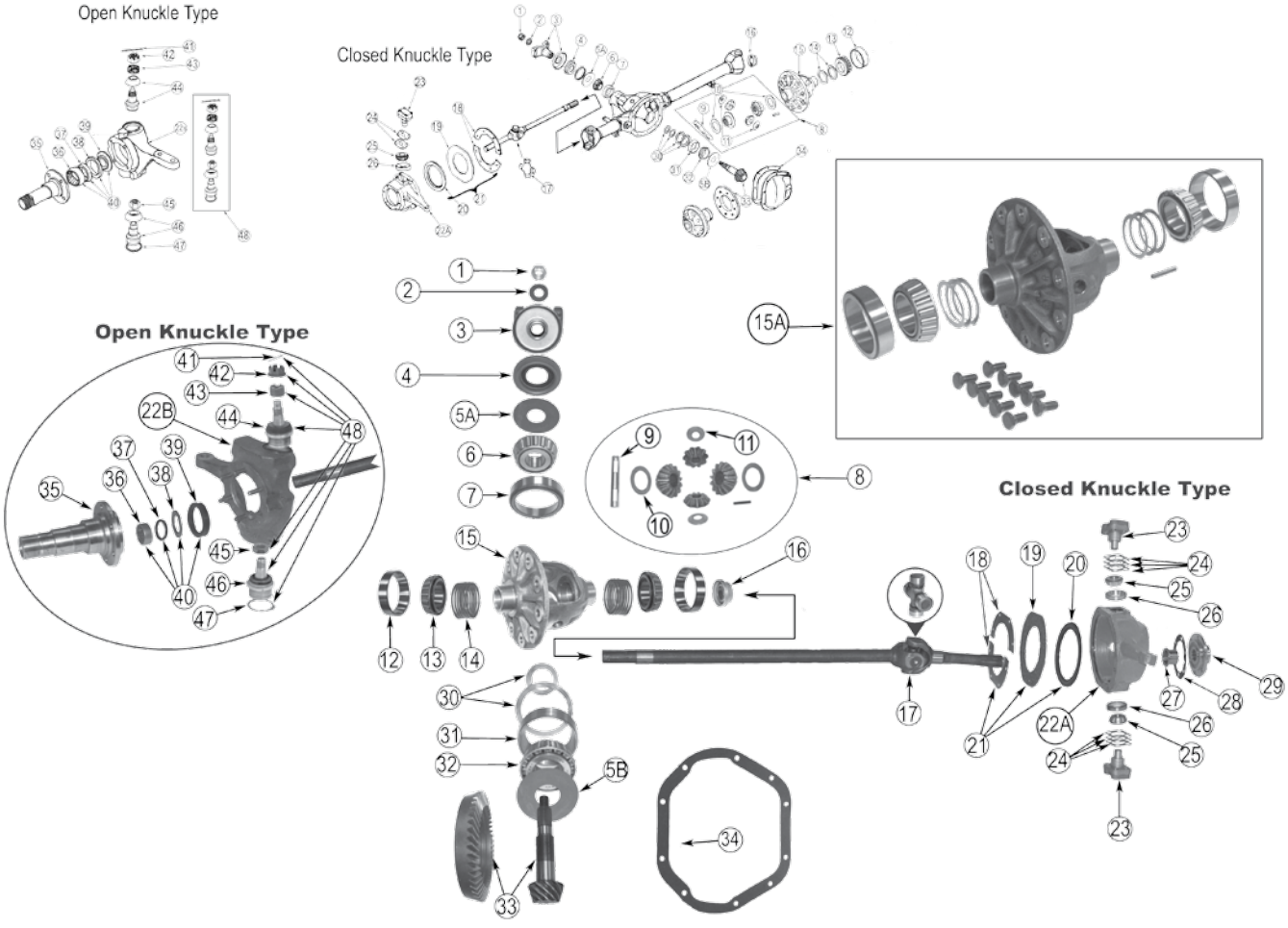

Copyright © 2014 Crown Automotive Sales Co., Inc. All rights reserved.

Dana 44 Front Axle

Item #	Description	Application	Comments	Replaces Part #
1	Nut, Pinion	All		J0801367
2	Washer, Pinion	All		J4004913
3	Yoke, Pinion	1971-80 SJ, J-Series 1981-91 SJ, J-Series FC-170 w/ Spicer Propeller Shaft		J0935685 83503388 A1445
4	Seal, Pinion	FC-170 SJ, J-Series w/o Slinger on Yoke SJ, J-Series w/ Slinger on Yoke		J0998092 83503390 J0998092
5A	Slinger, Pinion	All	Outer	3893982
5B	Slinger, Pinion	All	Inner	J0636566
6	Bearing, Pinion	All	Outer	J0052878
7	Cup, Pinion Bearing	All	Outer	J0052879
6 & 7	Kit, Pinion Bearing	All	Outer; Includes 6, 7	J8124052
8	Gear Set, Differential	All		J8129228
9	Shaft, Differential	All		636553
10	Washer, Differential Side Gear	All		J0645789
11	Washer, Differential Spider Gear	All		J3222999
12	Cup, Differential Bearing	All		J0052980
13	Bearing, Differential	All		J0805311
12 & 13	Bearing Kit, Differential	All	Includes 2 Bearings & 2 Cups	J8124071
14	Shim Set, Differential	All All	Shims Only Shims & Differential Cover Gasket	J0806483 J8124791
15	Case Only, Differential	All w/ 3.73 & Lower Gear Ratio All w/ 3.92 & Higher Gear Ratio	Bare Differential Case Bare Differential Case	J0991962 J0947057
15A	Case Kit, Differential	All w/ 3.73 & Lower Gear Ratio All w/ 3.92 & Higher Gear Ratio	Includes Case, Diff. Bearings & Shims, Ring Gear Bolts, and Cover Gasket	J8130017 J8129245
16	Seal, Axle Shaft Inner	1974-79 SJ, J-Series 1977-91 SJ, J-Series	2-1/4" Outside Diameter 2-5/8" Outside Diameter	8124832 83501009
17	U- Joint	1957-74 All 1974-91 All	1.062" Cap Diameter 1.187" Cap Diameter	J8136616 J8126638
18	Retainer, Steering Knuckle	1957-73 All	2 Required Per Knuckle	J0908006
19	Seal, Steering Knuckle	1957-73 All	Felt	J0908005
20	Seal, Steering Knuckle	1957-73 All	Rubber	J0909854
21	Seal Kit, Steering Knuckle	1957-73 All 1957-73 All 1957-73 All	Less Hardware (One Side) With Hardware (One Side) Less Hardware (Two Sides)	J0915664 J0998445 J0908226
22A	Knuckle, Steering, Closed	FC-170 FC-170	Right Left	J0805784 J0805783
22B	Knuckle, Steering, Open	1974-77 SJ, J-Series w/ Disc Brakes	Left	J8124371

Continued on Next Page

Copyright © 2014 Crown Automotive Sales Co., Inc. All rights reserved.

Dana 44 Front Axle
(Continued)

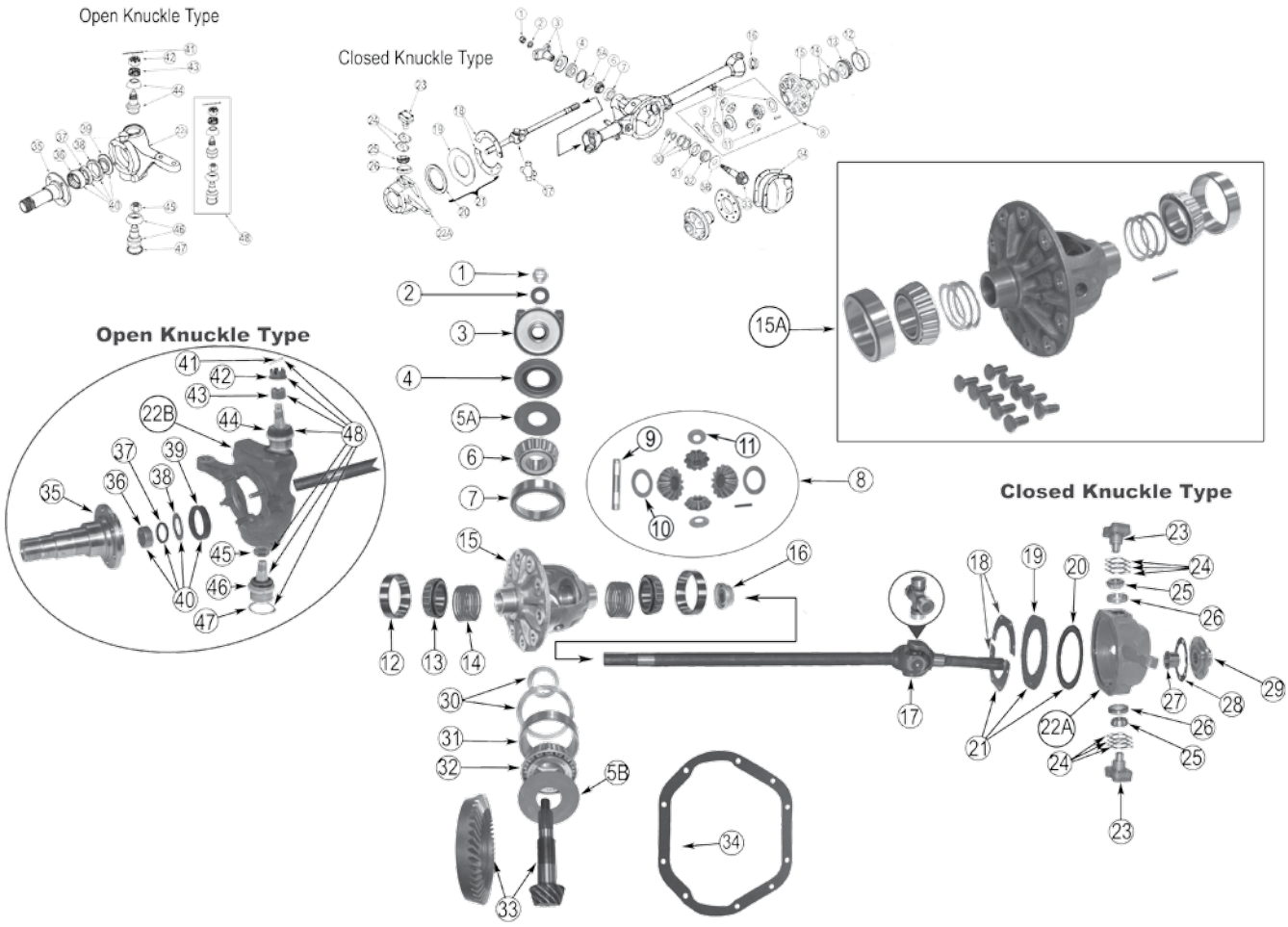

Copyright © 2014 Crown Automotive Sales Co., Inc. All rights reserved.

Dana 44 Front Axle
(Continued)

Item #	Description	Application	Comments	Replaces Part #
23	Cap, King Pin	1957-73 All	Upper or Lower	J0910901
24	Shim Set, King Pin	1957-73 All	Upper or Lower	JA006882
25	Bearing, King Pin	1957-73 All	Upper or Lower	J0052940
26	Cup, King Pin Bearing	1957-73 All	Upper or Lower	J0052941
27	Bushing, Spindle	1957-74 All 1974-91 SJ, J-Series	Flanged Bronze Bushing Bearing	J0649783 J8121402
28	Gasket, Drive Flange	1957-73 All	6-Bolt Pattern	J0649784
29	Flange, Axle Drive	1957-74 All	10 Splines	JA000868
30	Shim Set, Pinion	All		J8129221
31	Cup, Pinion Bearing	All	Inner	J0052877
32	Bearing, Pinion	All	Inner	J0807266
31 & 32	Kit, Pinion Bearing	All	Inner; Includes 31, 32	J8124051
33	Ring & Pinion	All All All All All All All All	3.07 Gear Ratio 3.31 Gear Ratio 3.54 Gear Ratio 3.73 Gear Ratio 3.92 Gear Ratio 4.09 Gear Ratio 4.27 Gear Ratio 4.88 Gear Ratio	J8129224 J8134219 J8129217 J0935650 J0943188 J8129225 J0910073* J8124386
34	Gasket, Differential Cover	All		J8122409
35	Spindle, Steering	FC-170 1977-91 SJ, J-Series	Left or Right Left or Right	J8120362 J8128767
36	Bearing, Spindle	1974-91 SJ, J-Series		J8121402
37	Seal, Spindle Bearing	1974-91 SJ, J-Series		8127351
38	Spacer, Spindle Bearing	1974-91 SJ, J-Series		83501113
39	Seal, Axle Shaft	1974-91 SJ, J-Series	Outer	J8127350
40	Kit, Bearing Spindle	1974-91 SJ, J-Series	Includes 36, 37, 38, 39	J8127356
41	Pin, Cotter	1974-91 SJ, J-Series	Upper	J8121392
42	Nut, Ball Joint	1974-91 SJ, J-Series	Upper	J8121364
43	Ring Split, Ball Joint	1974-91 SJ, J-Series	Upper	J8121365
44	Ball Joint	1974-91 SJ, J-Series	Upper	J8122495
45	Nut, Ball Joint	1974-91 SJ, J-Series	Lower	J8121391
46	Ball Joint	1974-91 SJ, J-Series	Lower	J8122496
47	Snap Ring, Ball Joint	1974-91 SJ, J-Series	Lower	J8124362
48	Ball Joint Kit	1974-91 SJ, J-Series	Includes 41, 42, 43, 44,45, 46, 47	J8126509

* Not Currently Available

Copyright © 2014 Crown Automotive Sales Co., Inc. All rights reserved.

Dana 30 Front Axle

1972-1986 CJ-5, 6, 7, 8
1972-1973 C104 Commando
1971-1973 SJ, J-Series

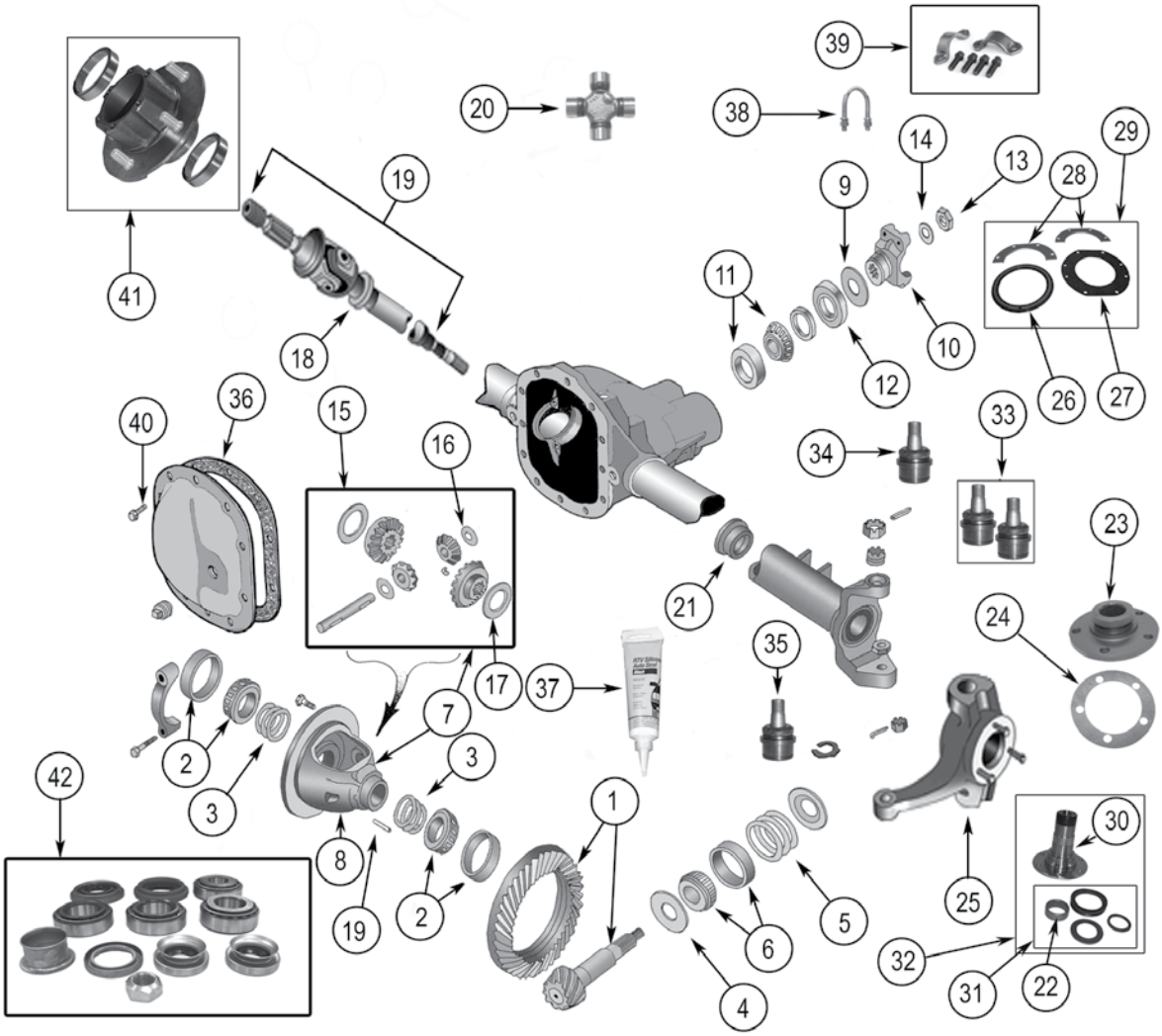

Item #	Description	Application	Comments	Replaces Part #
1	Ring & Pinion	All All All All All All	3.07 (43/14) Ratio 3.31 (43/13) Ratio 3.54 (46/13) Ratio 3.73 (41/11) Ratio 4.10 (41/10) Ratio 4.27 (47/11) Ratio	J8130381* J0945344* J8126518 J0945345 J8126494 J8126946
2	Bearing Set, Differential	All	Includes 2 Bearings and 2 Cups	J8126500
3	Shim Set, Differential	All		J8126506
4	Slinger, Pinion	All	Inner	3893982
5	Shim Set, Pinion	All		J8126503
6	Bearing Set, Pinion	All	Inner; Includes 1 Bearing & 1 Cup	J8126499
7	Case Assembly, Differential	All w/ 2.72, 3.07, 3.31, 3.54 Ratio All w/ 3.73, 4.09, 4.10 Ratio	Standard Standard	J8126513 J8126495
8	Case Only, Differential	All w/ 2.72, 3.07, 3.31, 3.54 Ratio All w/ 3.73, 4.09, 4.10 Ratio	Standard Standard	J0947055 J8126496
9	Slinger, Pinion	All	Outer	J0636566

Copyright © 2014 Crown Automotive Sales Co., Inc. All rights reserved.

Dana 30 Front Axle

Item #	Description	Application	Comments	Replaces Part #
10	Yoke, Pinion	1971-80 1981-86 1981-86	U-Bolt Type Bolt & Strap Type; w/ Slinger Bolt & Strap Type; w/o Slinger	J0935685 J8131656 83503388
11	Bearing Set, Pinion	All	Outer; Includes 1 Bearing & 1 Cup	J8124052
12	Seal, Pinion	All		J0998092
13	Nut, Pinion	All		J0801367
14	Washer, Pinion	All		J4004913
15	Gear Set, Differential	All	Standard	J8126497
16	Washer, Differential Spider Gear	All	Standard	J8120831
17	Washer, Differential Side Gear	All	Standard	J8120832
18	Slinger, Axle Shaft	1976-86	Inner	J8126232
19	Axle Shaft	1977-83 CJ-5 1977-83 CJ-5 1977-81 CJ-7, 8 1977-81 CJ-7, 8 1982-86 CJ-7, 8 1982-86 CJ-7, 8	Right; 22-7/8" Long Left; 35-3/4" Long Right; 22-7/8" Long Left; 35-3/4" Long Right; 24-9/16" Long Left; 37-11/32" Long	J8127598 J8127599 J8127598 J8127599 J8134294 J8134293
20	U-Joint, Axle	All		J8136616
21	Seal, Axle	CJ-5, 6, 7, 8, C104 SJ, J-Series	Inner Inner	J8121781 J8120358
22	Bearing, Spindle	All All	Needle Bearing Bushing	J8121402 J0649783
23	Flange, Axle Drive	1971-81 1981-86	Mounts w/ 6 Bolts Mounts w/ 5 Bolts	J0999396 J5362000
24	Gasket, Axle Flange	1971-81 1981-86	Mounts w/ 6 Bolts Mounts w/ 5 Bolts	J0649784 J5362001
25	Knuckle, Steering	SJ, J-Series 1978-86 CJ-5, 7, 8 1978-86 CJ-5, 7, 8	Left Right w/ 2-Bolt Caliper Left w/ 2-Bolt Caliper	J0805783 J8133603* J8133604
26	Seal, Knuckle	SJ, J-Series	Rubber	J0909854
27	Seal, Knuckle	SJ, J-Series	Felt	J0908005
28	Retainer, Steering Knuckle	SJ, J-Series	2 Required Per Knuckle	J0908006
29	Seal Kit, Knuckle	SJ, J-Series SJ, J-Series SJ, J-Series	Less Hardware (One Side) With Hardware (One Side) Less Hardware (Two Sides)	J0915664 J0998445 J0908226
30	Spindle, Steering	1971-76	Left or Right	J8121403
31	Spindle Kit, Steering	1971-76 1977/86	Left or Right; Includes Bearings & Seals Left or Right; Includes Bearings & Seals	J8126510 J8127356
32	Bearing & Seal Kit, Spindle	1977-86	Includes Bearing, Seals & Washer	J8128147
33	Ball Joint Kit	All Except SJ, J-Series	Includes 1 Upper and 1 Lower	J8126509
34	Ball Joint, Upper	All Except SJ, J-Series		J8122495
35	Ball Joint, Lower	All Except SJ, J-Series		J8122496
36	Gasket, Differential Cover	All		J8120360
37	Sealant	All		J8993317
38	U-Bolt	All		JA000490
39	Strap & Bolt Kit	All All	6-Point 12-Point	4006698K 4006928K
40	Bolt, Differential Cover	1976-86		J0273573
41	Hub Assembly	1978-81 1981-86	w/ Disc Brakes w/ 6-Bolt Hubs w/ 5-Bolt Hubs	5358568H 5363421H
42	Master Bearing & Seal Kit	All		D30EMASKIT

*Not Currently Available

Copyright © 2014 Crown Automotive Sales Co., Inc. All rights reserved.

AMC 20 Rear Axle

1976-1986 CJ-5, 7, 8
1980-1986 SJ, J-Series

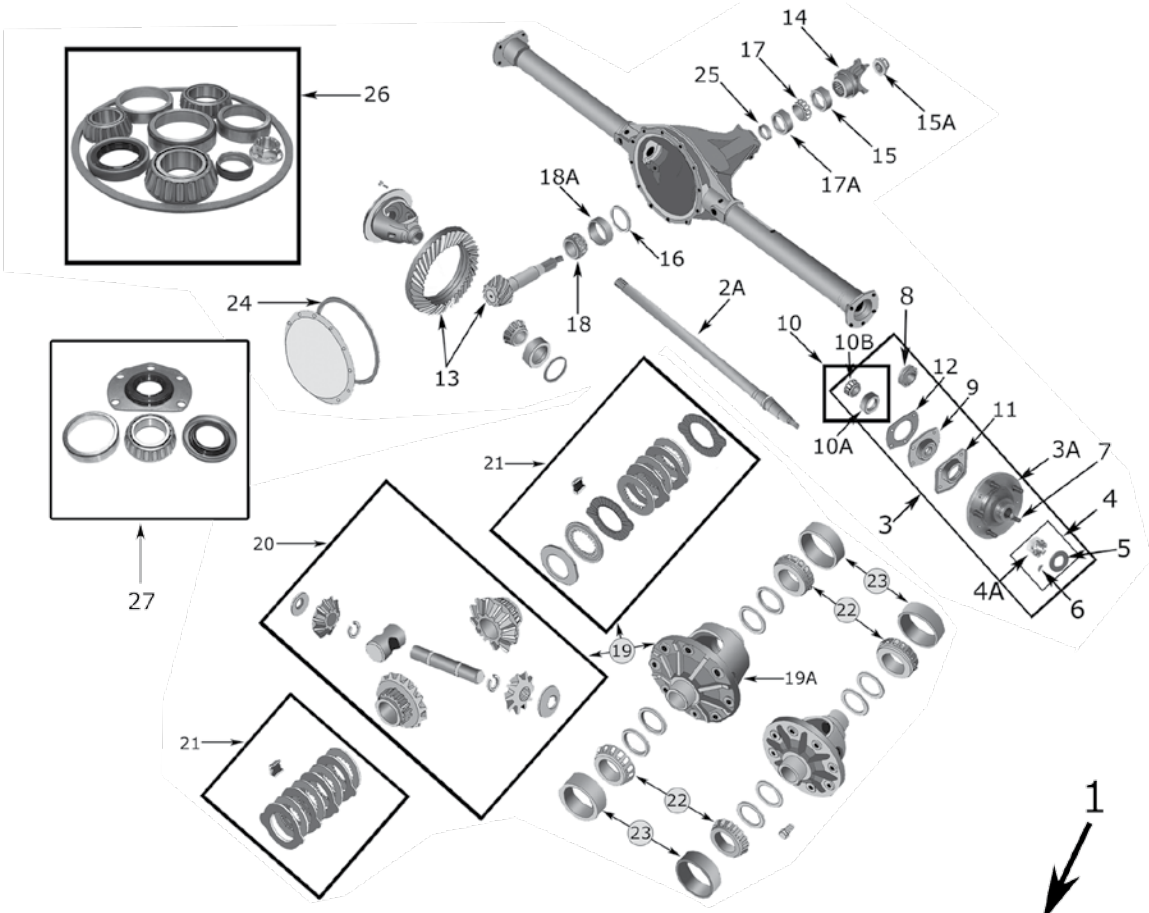

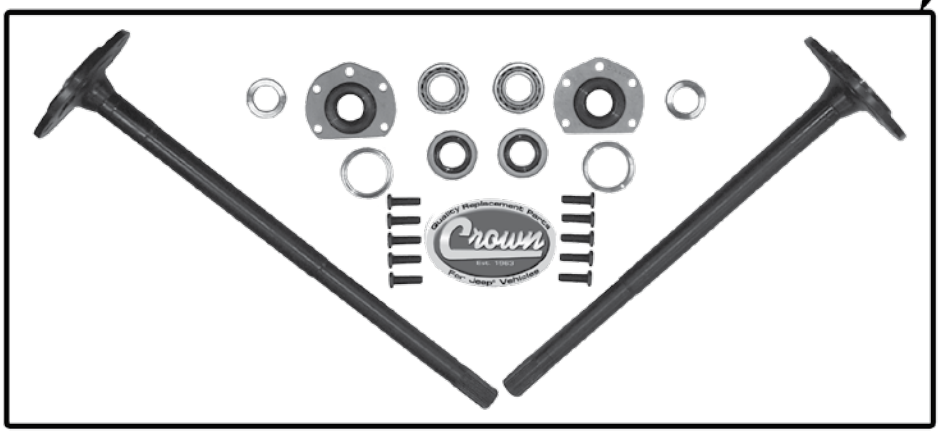

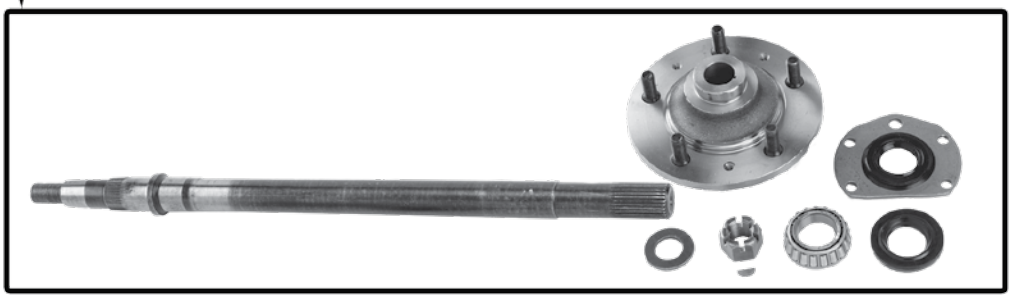

Copyright © 2014 Crown Automotive Sales Co., Inc. All rights reserved.

AMC 20 Rear Axle

Item #	Description	Years	Position	Models	Comments		Replaces Part #
1	Axle Set	1976-83	L & R	CJ-5	Replacement 1 Pc. Flanged, Less Quadra-Trac		7070-71K
		1976-81	L & R	CJ-7	Replacement 1 Pc. Flanged, Less Quadra-Trac		7070-71K
		1982-86	L & R	CJ-7, 8	Replacement 1 Pc. Flanged, Less Quadra-Trac		3885-86K
2	Kit, Axle	1976-83	Left	CJ-5	26-5/16″		8127070K
		1976-81	Left	CJ-7	26-5/16″		8127070K
		1976-83	Right	CJ-5	29-1/4″	Less Quadra-Trac	8127071K
		1976-81	Right	CJ-7	29-1/4″	Less Quadra-Trac	8127071K
		1982-86	Left	CJ-7, 8	28-9/16″	Less Quadra-Trac	8133885K
		1982-86	Right	CJ-7, 8	31-9/16″	Less Quadra-Trac	8133886K
		1976-79	Left	CJ-5, 7	33-1/2″	With Quadra-Trac	8127079K
		1976-79	Right	CJ-5, 7	22″	With Quadra-Trac	8127081K
2A	Shaft, Axle	1976-83	Left	CJ-5	26-5/16″	Less Quadra-Trac	J8127070
		1976-81	Left	CJ-7	26-5/16″	Less Quadra-Trac	J8127070
		1976-83	Right	CJ-5	29-1/4″	Less Quadra-Trac	J8127071
		1976-81	Right	CJ-7	29-1/4″	Less Quadra-Trac	J8127071
		1982-86	Left	CJ-7, 8	28-9/16″	Less Quadra-Trac	J8133885
		1982-86	Right	CJ-7, 8	31-9/16″	Less Quadra-Trac	J8133886
		1976-79	Left	CJ-5, 7	33-1/2″	With Quadra-Trac	J8127079
		1976-79	Right	CJ-5, 7	22″	With Quadra-Trac	J8127081
		1980-86	Left	SJ	27-3/4″	(Flanged)	J3235807
		1980-86	Right	SJ	29-1/4″	(Flanged)	J3235806
		1980-86	Left	J-10	31-3/4″	(Flanged)	J3235809
		1980-86	Right	J-10	32-1/8″	(Flanged)	J3235808
3	Hub Kit	1976-86		CJ-5, 7, 8	Includes #s 3A, 4, 8, 9, 10, 11, 12		8133730K
3A	Hub	1976-86		CJ-5, 7, 8			J8133730
4	Nut Kit, Hub	1976-86		CJ-5, 7, 8	Includes #s 4A, 5, 6		3155675K
4A	Nut, Hub	1976-86		CJ-5, 7, 8			J3155675
5	Washer, Hub	1976-86		CJ-5, 7, 8			J0131018
6	Key, Axle Shaft	1976-86		CJ-5, 7, 8			G103905
7	Stud, Wheel	1976-86		CJ-5, 7, 8			J5355719
		1980-86		SJ, J-Series			J3230413
8	Seal, Axle Shaft Inner	1976-86		CJ-5, 7, 8			J3170700
		1980-86		SJ, J-Series			J3235929
9	Seal, Axle Shaft Outer	1976-86		CJ-5, 7, 8			J4485691
		1980-86		SJ, J-Series			83503063
10	Bearing Kit, Axle Shaft	1976-86		CJ-5, 7, 8	Includes #s 10A, 10B		J8134015
		1980-86		SJ, J-Series	Includes #s 10A, 10B		83503064
10A	Cup, Axle Shaft Bearing	1976-86		CJ-5, 7, 8			J5360955
10B	Bearing, Axle Shaft	1976-86		CJ-5, 7, 8			J3150046

Continued on Next Page

Copyright © 2014 Crown Automotive Sales Co., Inc. All rights reserved.

AMC 20 Rear Axle (Continued)

1976-1986 CJ-5, 7, 8
1980-1986 SJ, J-Series

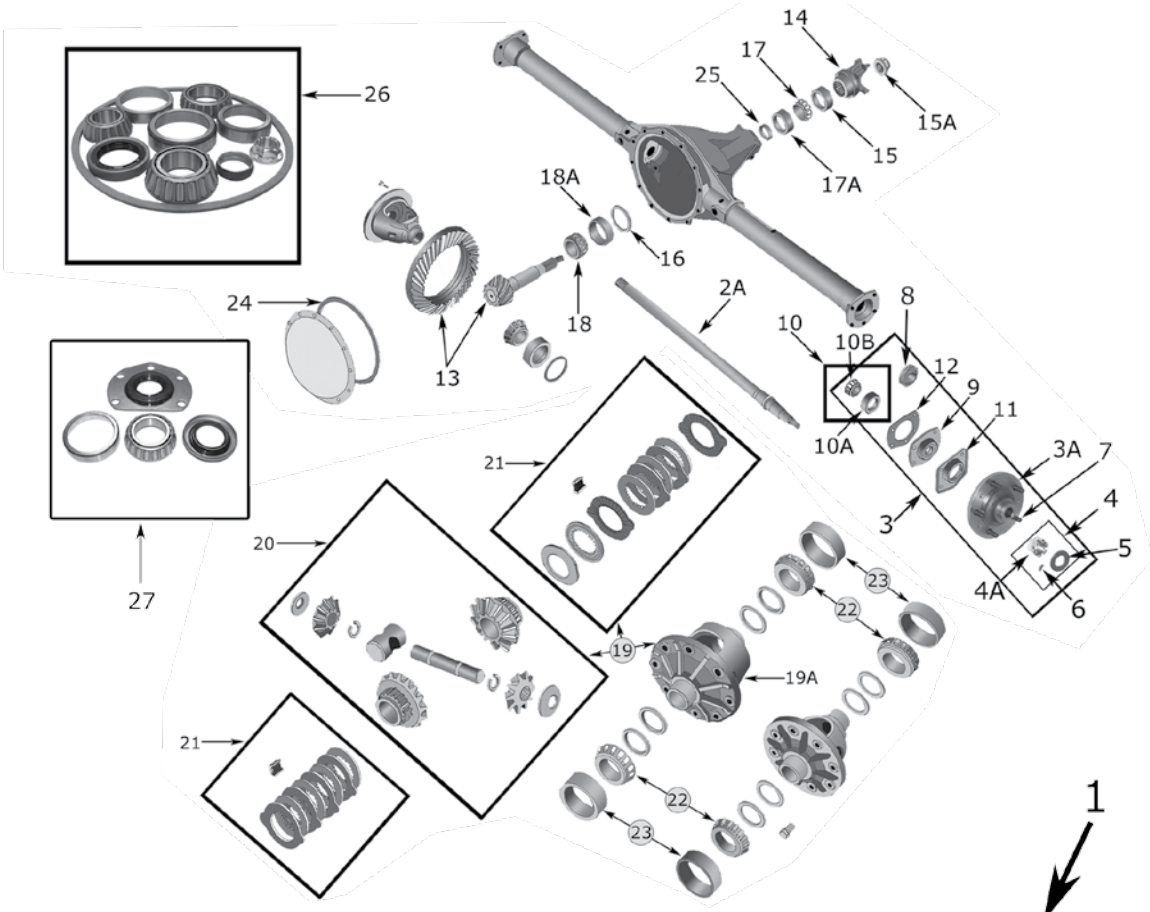

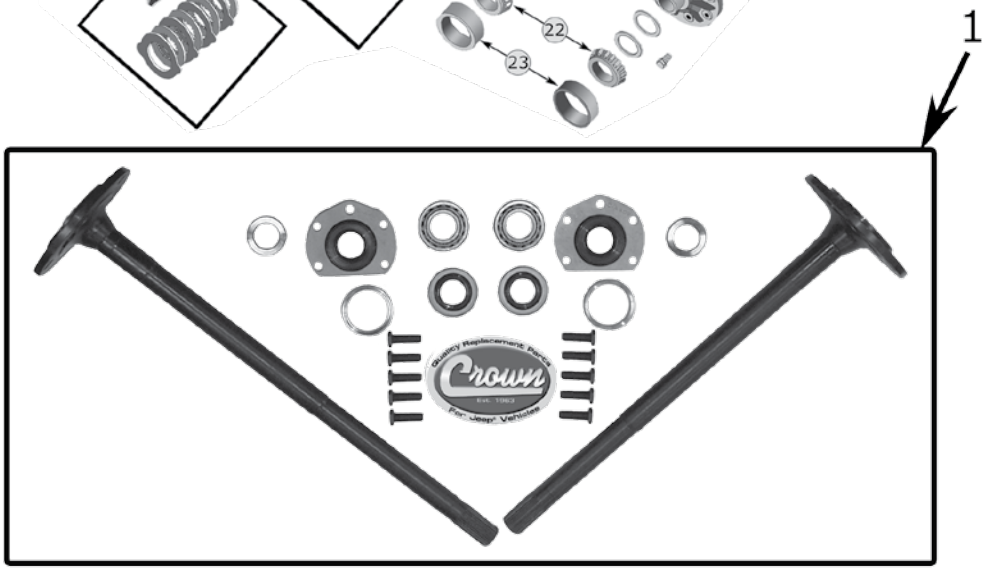

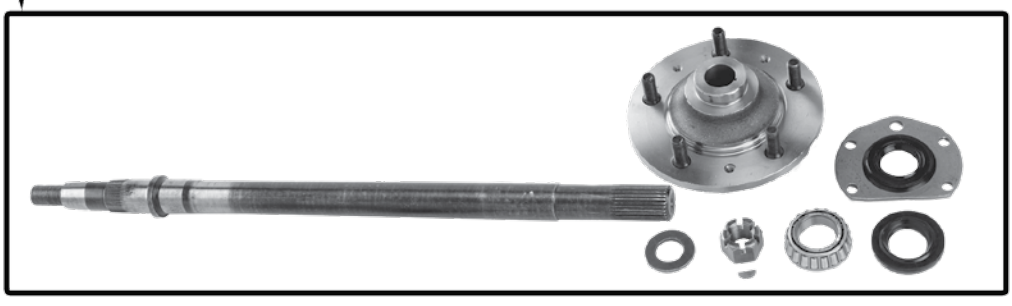

Copyright © 2014 Crown Automotive Sales Co., Inc. All rights reserved.

AMC 20 Rear Axle (Continued)

Item #	Description	Years	Models	Comments	Replaces Part #
11	Retainer, Axle Shaft	1976-86 1980-86	CJ SJ, J-Series		J3184573 J8133197
12	Shim, Wheel Bearing	1976-86 1976-86	CJ CJ	.003" Thick .010" Thick	J3141319 J3141320
13	Ring & Pinion Set		All All All All All	2.73 Ratio (41/15) 3.31 Ratio (43/13) 3.54 Ratio (39/11) 4.10 Ratio (41/10) 4.56 Ratio (41/9)	J8132699 J8132700 J4486825 J8127072 J8134410
14	Yoke, Pinion		All All	U-Bolt Type Strap & Bolt Type	J8129201 83502058
15	Seal, Pinion		All		83504946
15A	Nut, Pinion Lock		All		J3182601
16	Shim Set, Pinion		All	(.093 - .098 Thicknesses)	3205533K
17	Cone, Bearing Pinion, Outer		All		J3172135
17A	Bearing Cup, Pinion, Outer		All		J3172134
18	Bearing Cone, Pinion, Inner		All		J3172563
18A	Cup, Bearing Pinion, Inner		All		J3172564
19	Case Assembly, Trac-Lok		CJ	3.31, 3.54, 3.73, 4.10, 4.56	J3212192
19A	Case Only, Trac-Lok		CJ	3.31, 3.54, 3.73, 4.10, 4.56	J8120280
20	Gear Set, Differential		All All	(Standard) (Trac-Lok)	J8127092 J8120326
21	Disc Kit, Differential		All	(Trac-Lok)	J8120325
22	Bearing Cone, Differential Case		All		J3172565
23	Bearing Cup, Differential Case Side		All		J3172566
24	Gasket, Differential Cover		All		J3172122
25	Spacer, Pinion		All		J3185971
26	Bearing & Seal Kit	1976-86	CJ		AM20BK
27	Bearing & Seal Kit	1976-86 1980-86	CJ SJ, J-Series	(Need 2 Kits Per Axle) (Need 2 Kits Per Axle)	3150046K J8130510

Copyright © 2014 Crown Automotive Sales Co., Inc. All rights reserved.

Dana 27 Rear Axle

1941-1945 MB

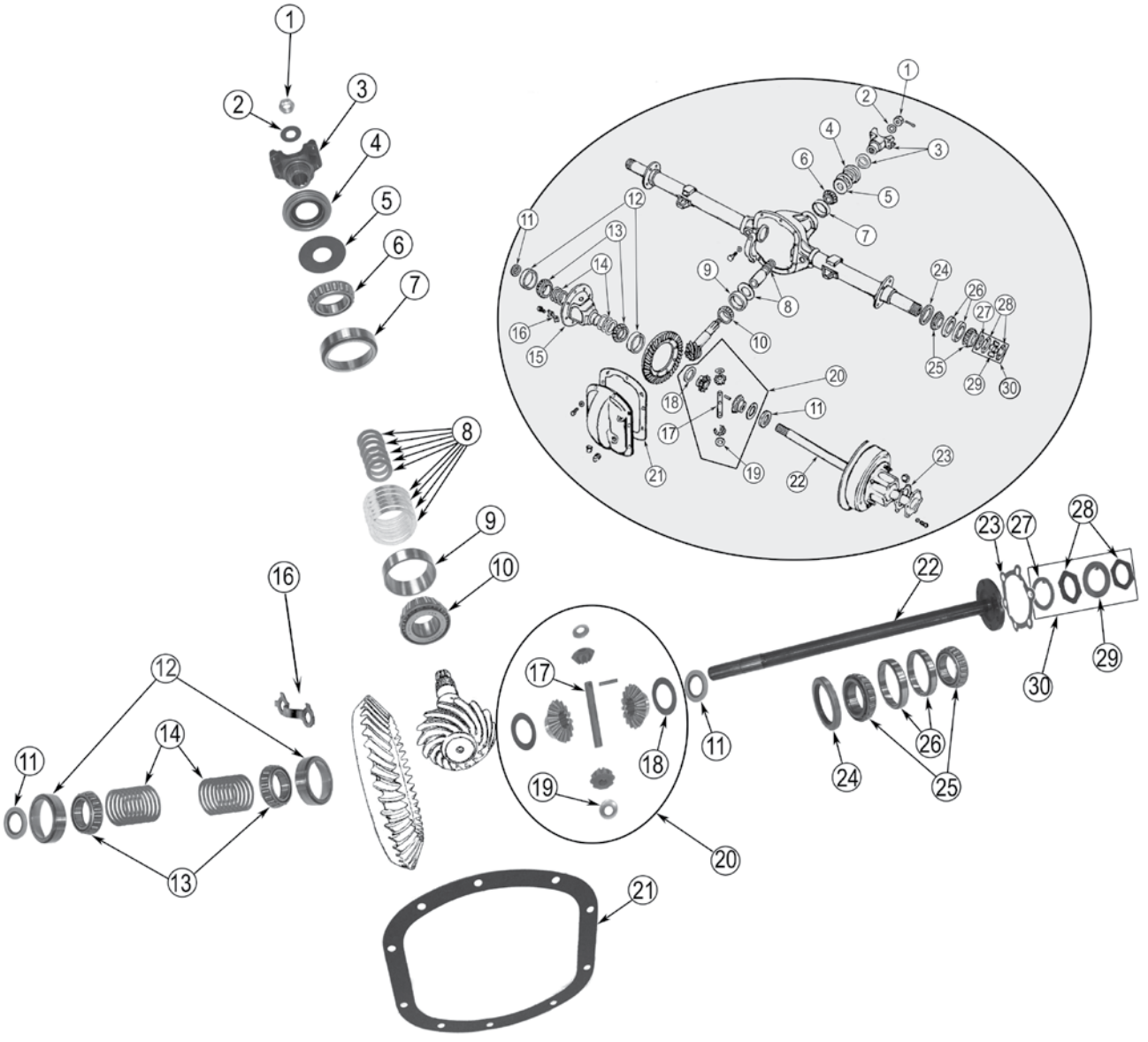

Copyright © 2014 Crown Automotive Sales Co., Inc. All rights reserved.

Dana 27 Rear Axle

Item #	Description	Comments	Replaces Part #
1	Nut, Pinion		636569*
2	Washer, Pinion		J4004913
3	Yoke, Pinion		A1445
4	Seal, Pinion		J0998092
5	Slinger, Pinion		J0636566
6	Bearing, Pinion	Outer	J0052878
7	Cup, Pinion Bearing	Outer	J0052879
6&7	Bearing Kit, Pinion	Outer	J8124052
8	Shim Set, Pinion		J0649228
9	Cup, Pinion Bearing	Inner	J0052877
10	Bearing, Pinion	Inner	J0807266
9&10	Bearing Kit, Pinion	Inner	J8124051
11	Seal, Axle Shaft	Inner	JA000779
12	Cup, Differential Bearing		52881
13	Bearing, Differential		J3105346
14	Shim Set, Differential		J0648061
15	Case Only, Differential	Not Shown In Diagram	A-793*
16	Strap, Ring & Pinion	Locks Ring Gear Bolts (4 per Differential)	A792
17	Shaft, Differential		JA000798
18	Washer, Differential Side Gear		JA000795
19	Washer, Differential Spider Gear		JA000797
20	Gear Set, Differential		J0926544
21	Gasket, Differential Cover		J8120360
22	Shaft, Axle	Right; 10 Splines; 22" Long Left; 10 Splines; , 30-5/8" Long	A901 A902
23	Gasket, Axle		A904
24	Seal, Hub		J0805150
25	Bearing, Axle Shaft	Inner or Outer	J0052942
26	Cup, Axle Shaft Bearing	Inner or Outer	J0052943
27	Lock Washer, Wheel Bearing	Inner	JA000865
28	Nut, Wheel Bearing	2 required per wheel	JA000866
29	Lock Washer, Wheel Bearing Nut	Outer	JA000867
30	Kit, Wheel Bearing Washer & Nut	Includes #26, 27, and 28	A867K

* Not Currently Available

Copyright © 2014 Crown Automotive Sales Co., Inc. All rights reserved.

Dana 30 Rear Axle

1966-1971 C101 Commando

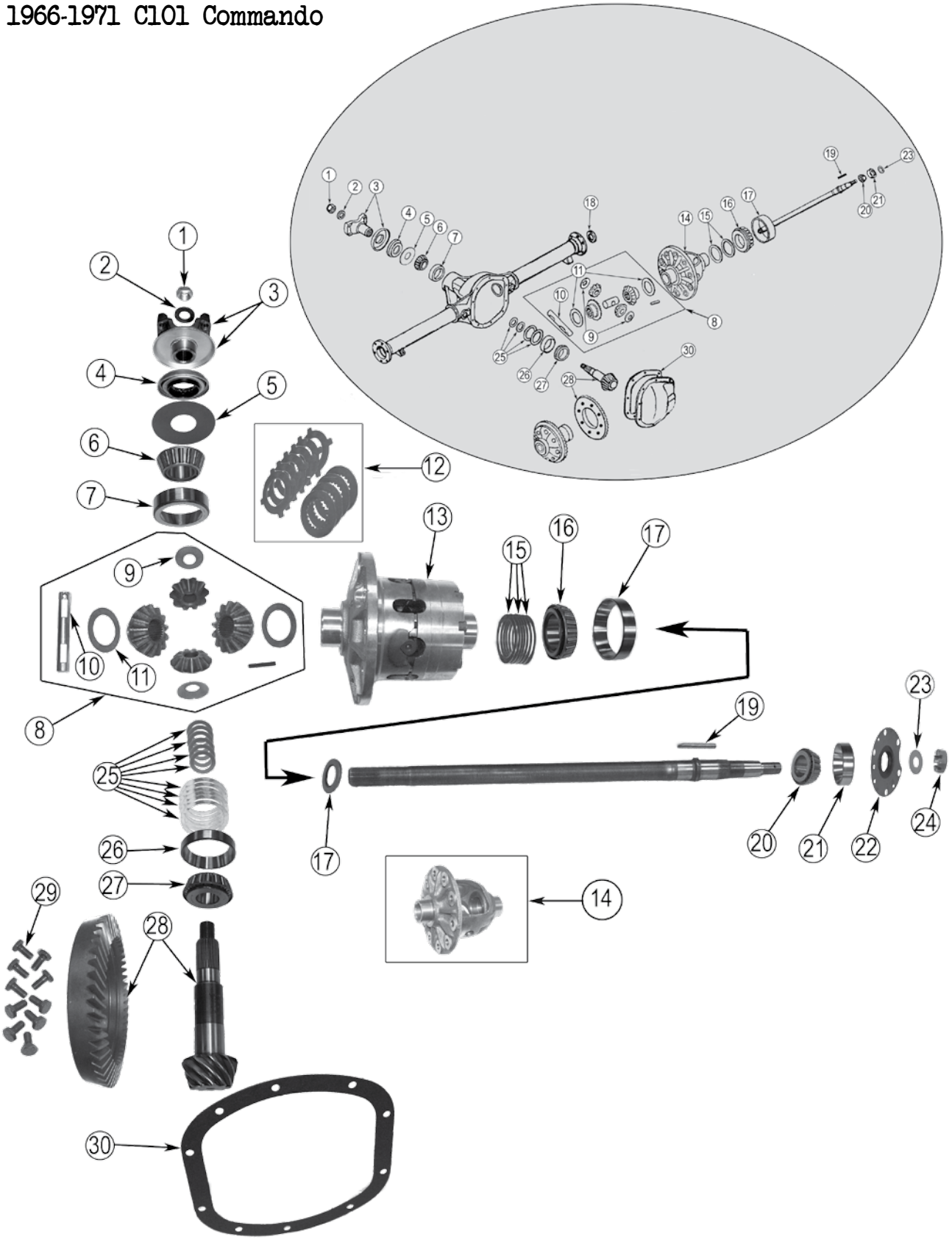

Copyright © 2014 Crown Automotive Sales Co., Inc. All rights reserved.

Dana 30 Rear Axle

Item #	Description	Comments	Replaces Part #
1	Nut, Pinion		J0801367
2	Washer, Pinion		J4004913
3	Yoke, Pinion	26 Splines w/ Slinger	J0935685
4	Seal, Pinion		J0998092
5	Slinger, Pinion		J0636566
6	Bearing, Pinion	Outer	926802
7	Cup, Pinion Bearing	Outer	J3156062
8	Gear Set, Differential	Standard; Also Includes #27 & 28	J8126497
9	Washer, Differential Spider Gear	Standard	J3222999
10	Shaft, Differential	Standard	5003840AA
11	Washer, Differential Side Gear	Standard	J0645789
12	Clutch Disc Kit, Differential	Power-Lok	J8126153
13	Case Assembly, Differential	Power-Lok: 3.73 & Higher	945333*
14	Case, Differential	Standard (Bare): 3.54 & Lower Standard (Bare): 3.73 & Higher	J0947055 J8126496
15	Shim Set, Differential		J0648061
16	Bearing, Differential		J3156052
17	Cup, Differential Bearing		J3171166
18	Seal, Axle Shaft	Inner	J0640959
19	Key, Axle to Hub		J0644340
20	Bearing, Axle Shaft		J0052799
21	Cup, Axle Shaft Bearing		J0052800
22	Seal, Axle Shaft	Outer	J0942901
23	Washer, Axle Shaft Nut		J4004913
24	Nut, Axle to Hub		J0636344
25	Shim Set, Pinion		J0649228
26	Cup, Pinion Bearing	Inner	J3156065
27	Bearing, Pinion	Inner	J3156066
26&27	Kit, Pinion Bearing	Inner	J8126499
28	Ring & Pinion Set	3.73 Ratio: Includes item #'s 1, 2A, 4, 5, 6, 7, 23, 24, 25, 26, 27, 28 4.27 Ratio: Includes item #'s 1, 2A, 4, 5, 6, 7, 23, 24, 25, 26, 27, 28 4.88 Ratio: Includes item #'s 1, 2A, 4, 5, 6, 7, 23, 24, 25, 26, 27, 28	J0945345 J8126946 J0945347
29	Bolt, Ring Gear	10 Required	J0649454
30	Gasket, Differential Cover		J8120360

* Not Currently Available

Copyright © 2014 Crown Automotive Sales Co., Inc. All rights reserved.

Dana 44 Rear Axle w/ Flanged Axles

1969-1975 CJ-5, 6
1986 CJ-7, 8
1966-1973 C101, C104 Commando
1971-1991 SJ, J-Series

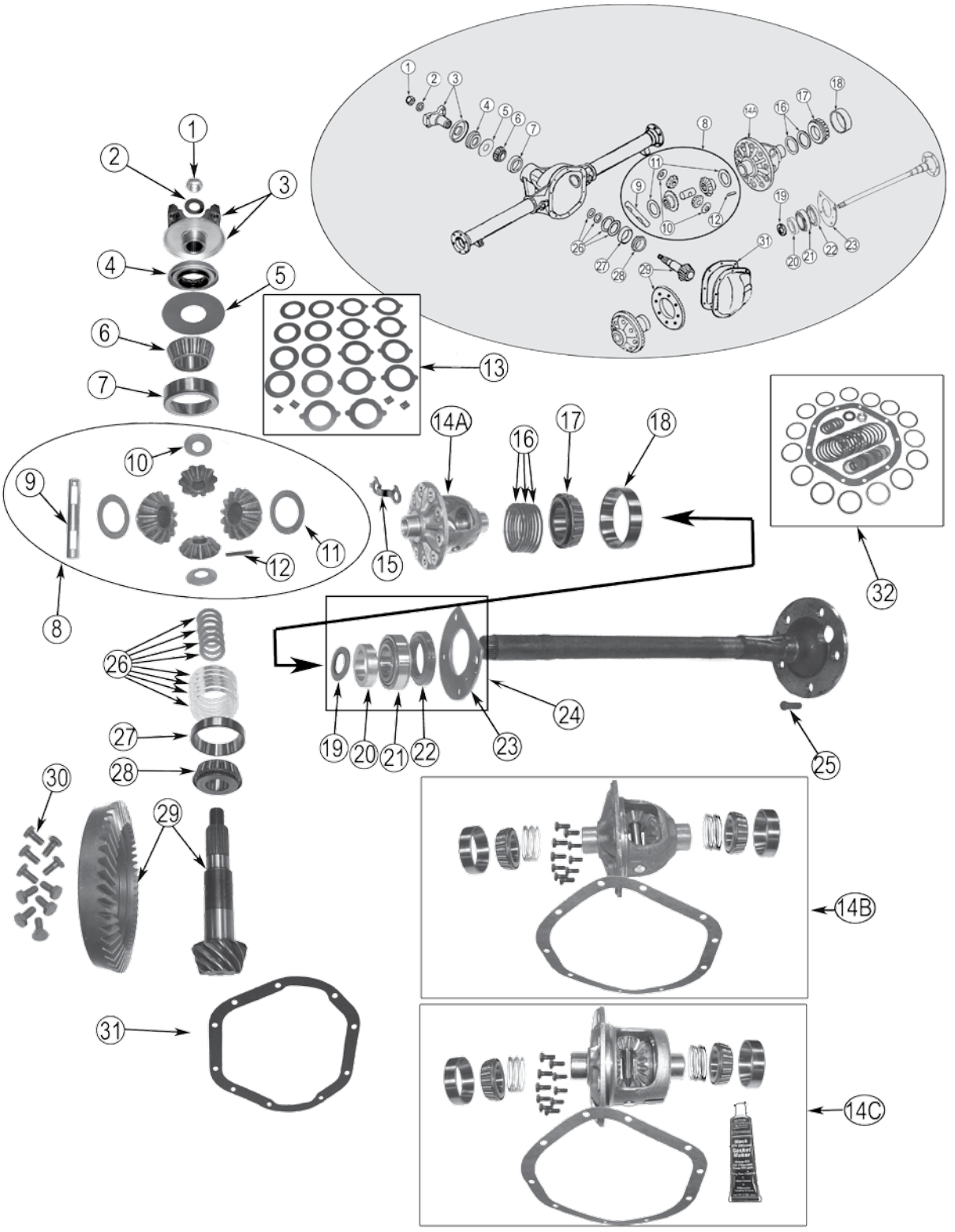

Copyright © 2014 Crown Automotive Sales Co., Inc. All rights reserved.

Dana 44 Rear Axle w/ Flanged Axles

Item #	Description	Application	Comments	Replaces Part #
1	Nut, Pinion	All		J0801367
2	Washer, Pinion	All		J4004913
3	Yoke, Pinion	All All All	U-Bolt Style; Includes Slinger Strap & Bolt Style; Includes Slinger Strap & Bolt Style; No Slinger	J0935685 83503388 J8131656
4	Seal, Pinion	CJ-5, 6, C101, C104 CJ-7, 8 CJ-7, 8 71/86 SJ, J-Series 71/86 SJ, J-Series 87/91 SJ, J-Series	 w/ Slinger on Yoke w/o Slinger on Yoke w/o Slinger on Yoke w/ Slinger on Yoke	J0998092 J0998092 83503390 83503390 J0998092 83503390
5	Slinger, Pinion	All		J0636566
6	Bearing, Pinion	All	Outer	J0052878
7	Cup, Pinion Bearing	All	Outer	J0052879
6&7	Kit, Pinion Bearing	All	Outer	J8124052
8	Gear Set, Differential	All	Standard	83503068
9	Shaft, Differential	All	Standard	636553
10	Washer, Differential Spider Gear	All	Standard	J3222999
11	Washer, Differential Side Gear	All	Standard	J3220250
12	Pin, Differential Shaft	All	Standard	J0636360
13	Disc Kit, Differential	All	Trac-Lok	J0994345
14A	Case Only, Differential	All All	Standard; 3.73 & Down Standard; 3.91 & Up	J0991962 J0947057
14B	Case Assembly, Differential	All All	Standard; 3.73 & Down Standard; 3.91 & Up	J8130017 J8129245
14C	Case Assembly, Differential	All All	Trac-Lok; 3.73 & Down Trac-Lok; 3.91 & Up	83505431 4741098
15	Strap, Ring & Pinion	CJ-5, 6, C101, C104	Locks Ring Gear Bolts (5 per Differential)	J0802561
16	Shim Set, Differential	All All All	 Includes Differential Cover Gasket Includes Sealant	J0806483 J8124791 J8129222

Continued on Next Page

Copyright © 2014 Crown Automotive Sales Co., Inc. All rights reserved.

Dana 44 Rear Axle w/ Flanged Axles (Continued)

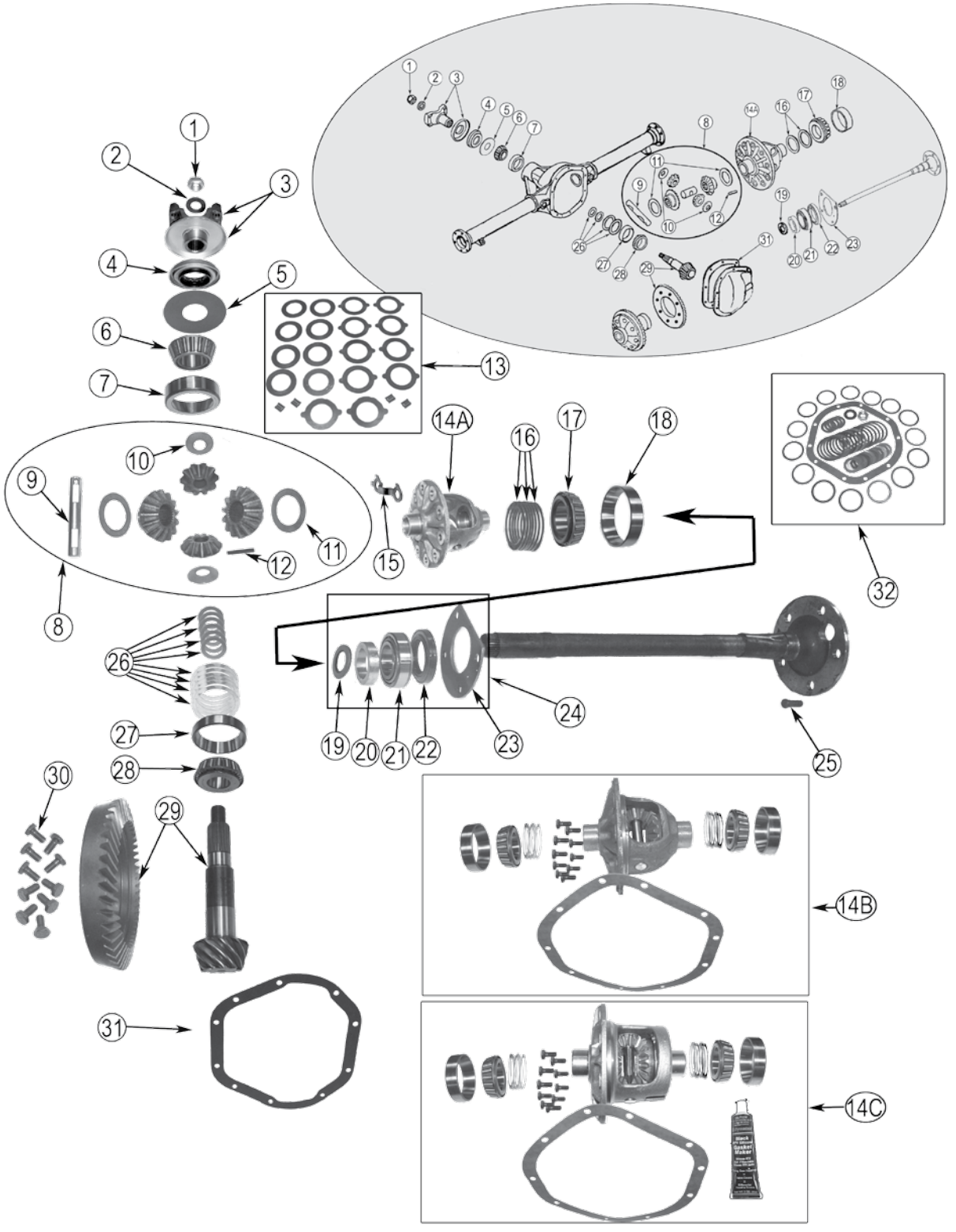

Copyright © 2014 Crown Automotive Sales Co., Inc. All rights reserved.

Dana 44 Rear Axle w/ Flanged Axles (Continued)

Item #	Description	Application	Comments	Replaces Part #
17	Bearing, Differential	All		J0805311
18	Cup, Differential Bearing	All		J0052980
17&18	Kit, Differential Bearing	All	Includes 2 Bearings and 2 Cups	J8124071
19	Seal, Axle Shaft	All	Inner	J3235929
20	Ring, Axle Bearing Retaining	All		83503077
21	Bearing, Axle Shaft	All		83503064
22	Seal, Axle Shaft	All	Outer	83503063
23	Retainer, Axle Bearing	CJ-5, 6, 7, 8, C101, C104 SJ, J-Series		J0994260 J8133197
24	Bearing Kit, Axle Shaft	CJ-5, 6, 7, 8, C101, C104 SJ, J-Series	Includes Item #s 18, 19, 20, 21, 22 Includes Item #s 18, 19, 20, 21, 22	J8124779 J8130510
25	Stud, Rear Axle Shaft	CJ-5, 6, 7, 8, C101, C104 SJ, J-Series w/ 5 Studs SJ, J-Series w/ 6 Studs		J5355719 J5355719 J3230413
26	Shim Set, Pinion	All All	Includes Item #s 1, 31 Includes Item #s 1, 31	J0649228 J8129221
27	Cup, Pinion Bearing	All	Inner	J0052877
28	Bearing, Pinion	All	Inner	J0807266
27&28	Kit, Pinion Bearing	All	Inner	J8124051
29	Ring & Pinion Set	All All All All All All	3.07 Ratio 3.54 Ratio 3.73 Ratio; Ring & Pinion Only 3.73 Ratio 4.09 Ratio 4.27 Ratio	J8129224 J8129217 J0935650 J8124777 J8129225 J0910073*
30	Bolt, Ring Gear	All	10 Required	J0649454
31	Gasket, Differential Cover	All		J8122409
32	Shim Set, Pinion & Differential	All	Includes Differential Cover Gasket, Differential & Pinion Shim Sets, Pinion Washer & Nut	J8129223

* Not Currently Available

Copyright © 2014 Crown Automotive Sales Co., Inc. All rights reserved.

Dana 44 Rear Axle w/ Tapered Axles

1948-1968 CJ-3A, 3B, 5, 6
1956-1964 FC-150, FC-170
1946-1964 Willys Pickup, Station Wagon, Sedan Delivery

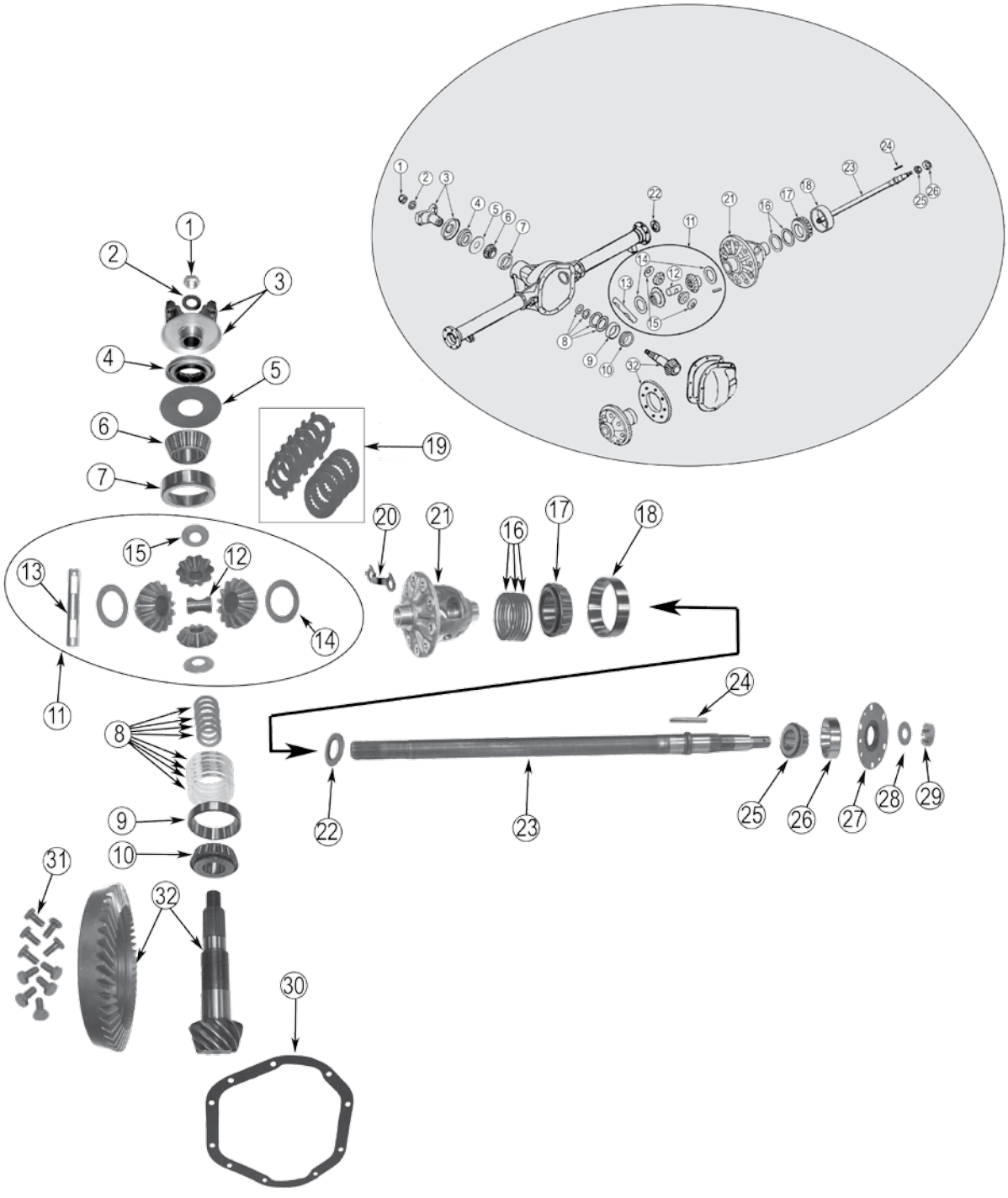

Copyright © 2014 Crown Automotive Sales Co., Inc. All rights reserved.

Dana 44 Rear Axle w/ Tapered Axles

Item #	Description	Application	Comments	Replaces Part #
1	Nut, Pinion	All		J0801367
2	Washer, Pinion	All		J4004913
3	Yoke, Pinion	All All	10 Splines w/ Slinger; U-Bolt Type 10 Splines w/o Slinger; Bolt & Strap Type	J0807693 A1445
4	Seal, Pinion	All		J0998092
5	Slinger, Pinion	All		J0636566
6	Bearing, Pinion	All	Outer	J0052878
7	Cup, Pinion Bearing	All	Outer	J0052879
6&7	Kit, Pinion Bearing	All	Outer	J8124052
8	Shim Set, Pinion	All		J0649228
9	Cup, Pinion Bearing	All	Inner	J0052877
10	Bearing, Pinion	All	Inner	J0807266
9&10	Kit, Pinion Bearing	All	Inner	J8124051
11	Gear Set, Differential	All	Standard; 19 Splines	J0916361
12	Block, Differential Spacer	All		J0640965
13	Shaft, Differential	All	Standard	636553
14	Washer, Differential Side Gear	All	Standard	J0645789
15	Washer, Differential Spider Gear	All	Standard	J3222999
16	Shim Set, Differential	All		919698*
17	Bearing, Differential	All		J0052979
18	Cup, Differential Bearing	All		J0052980
19	Disc Kit, Differential	All	Power Lok Differential	J0925339
20	Strap, Ring & Pinion	All	Locks Ring Gear Bolts (5 per Differential)	J0802561
21	Case Only, Differential	All All	Standard; 3.73 & Down Standard; 3.91 & Up	932725* 802562*
22	Seal, Axle Shaft	All Except SJ, J-Series SJ, J-Series	Inner Inner	J0640959 J0919317
23	Shaft, Axle	CJ-3A, 3B, 5, 6 CJ-3A, 3B, 5, 6 CJ-3A, 3B, 5, 6, FC-150, FC-170, Truck CJ-3A, 3B, 5, 6, FC-150, FC-170, Truck SW, SD	Right; 10 Splines; 21-7/16" Long Left; 10 Splines; 29-11/16" Long Right; 19 Splines; 29-11/16" Long Left; 19 Splines; 21-7/16" Long Right; 19 Splines; 28-7/8" Long	J0640969 J0640968 J0912625 J0912626 J0909405
24	Key, Axle Shaft to Hub	All		J0644340
25	Bearing, Axle Shaft	All		J0052799
26	Cup, Axle Shaft Bearing	All		J0052800
27	Seal, Axle	All Except 66-71 CJ w/ 10" Brakes 1961-71 CJ w/ 10" Brakes	Outer (Includes 2 Gaskets) Outer, 2 Required	J0914802 J0935612
28	Washer, Axle Shaft to Hub	All		J4004913
29	Nut, Axle Shaft to Hub	All		J0636344
30	Gasket, Differential Cover	All		J8122409
31	Bolt, Ring Gear	All	10 Required	J0649454
32	Ring and Pinion Set	All All All All All All All	3.31 Ratio w/ 26 Spline Pinion 3.54 Ratio w/ 26 Spline Pinion 3.73 Ratio w/ 26 Spline Pinion; Ring & Pinion Only 4.09 Ratio w/ 26 Spline Pinion 4.27 Ratio w/ 26 Spline Pinion 4.88 Ratio w/ 26 Spline Pinion; Ring & Pinion Only 5.38 Ratio w/ 26 Spline Pinion	J8134219 J8129217 J0935650 J8129225 J0910073* J8124386 J0801368*

* Not Currently Available

Copyright © 2014 Crown Automotive Sales Co., Inc. All rights reserved.

Dana 53 Rear Axle

1957-1964 FC-150, FC-170
1963-1971 J-Series
1950-1965 Willys Pickup

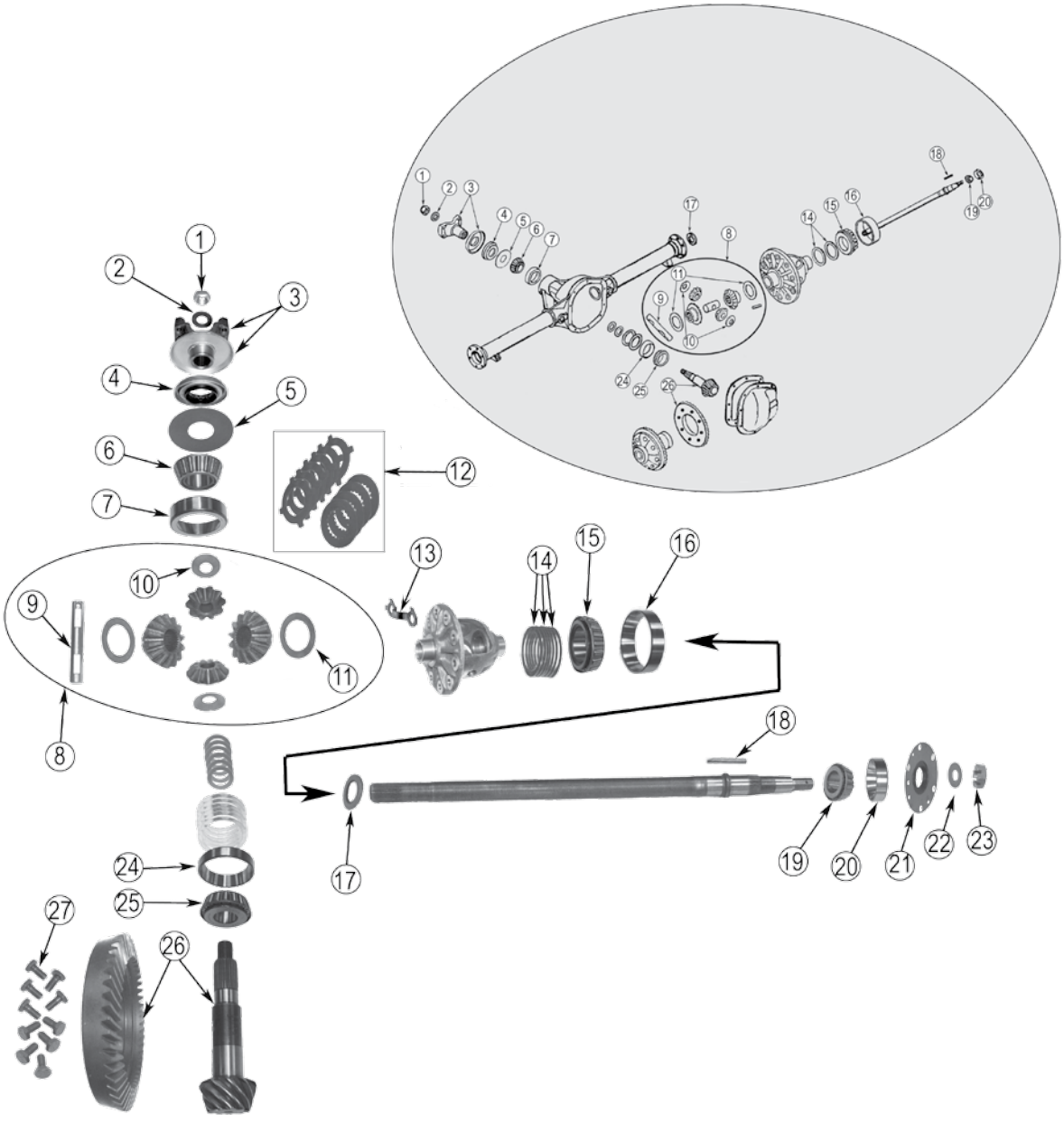

Copyright © 2014 Crown Automotive Sales Co., Inc. All rights reserved.

Dana 53 Rear Axle

Item #	Description	Comments	Replaces Part #
1	Nut, Pinion		J0801367
2	Washer, Pinion		J4004913
3	Yoke, Pinion	Strap & Bolt Type; 10 Splines w/ Slinger	J0807693
4	Seal, Pinion		J0998092
5	Slinger, Pinion		J0636566
6	Bearing, Pinion	Outer	J0052878
7	Cup, Pinion Bearing	Outer	J0052879
6&7	Bearing Kit, Pinion	Outer	J8124052
8	Gear Set, Differential	Standard	J0908333
9	Shaft, Differential Pinion	Standard	636553
10	Washer, Differential Spider Gear	Standard	J3222999
11	Washer, Differential Side Gear	Standard	J3220250
12	Disc Kit, Differential	Power-Lok	J0925339
13	Strap, Ring & Pinion	Locks Ring Gear Bolts (5 per Differential)	J0802561
14	Shim Set, Differential		J0806483
15	Bearing, Differential		J0805311
16	Cup, Differential Bearing		J0805312
17	Seal, Axle Shaft	Inner	J0644254
18	Key, Axle Shaft to Hub		J0644340
19	Bearing, Axle Shaft		J0054153
20	Cup, Axle Shaft Bearing		J0054154
21	Seal, Axle Shaft	Outer; Includes 2 Gaskets	J0914802
22	Washer, Axle Shaft to Hub		J4004913
23	Nut, Axle Shaft to Hub		J0636344
24	Cup, Pinion Bearing	Inner	J0805329
25	Bearing, Pinion	Inner	J0805328
26	Ring & Pinion Set	4.88 Ratio; Ring and Pinion Only	J0908331
27	Bolt, Ring Gear		J0649454

Copyright © 2014 Crown Automotive Sales Co., Inc. All rights reserved.

Dana 41 Rear Axle

1969-1949 CJ-2A

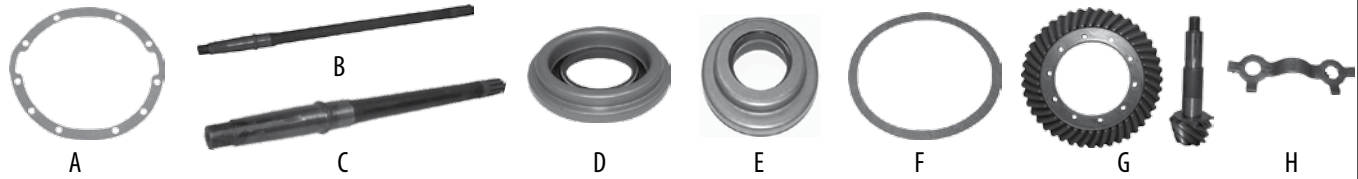

Item #	Description	Position	Comments	Replaced Part #
A	Differential Cover Gasket			J0639957
B	Axle Shaft	Rear, Left	10 Splines: 29-11/16" Long	J0640968
C	Axle Shaft	Rear, Right	10 Splines	J0640969
D	Pinion Seal		This is an Open Back Oil Seal; Can use 639265 Closed Seal	J0998092
E	Pinion Seal		This is a Closed Back Oil Seal; Can use J0998092 Open Back Seal	639265
F	Pinion Gasket			J0636565
G	Ring & Pinion		5.38 Ratio	J0801368
H	Ring Gear Bolt Lock Strap		Locks Ring Gear Bolts; 5 Required per Differential	J0802561

Dana 60 Rear Axle

1969-1983 J-Series

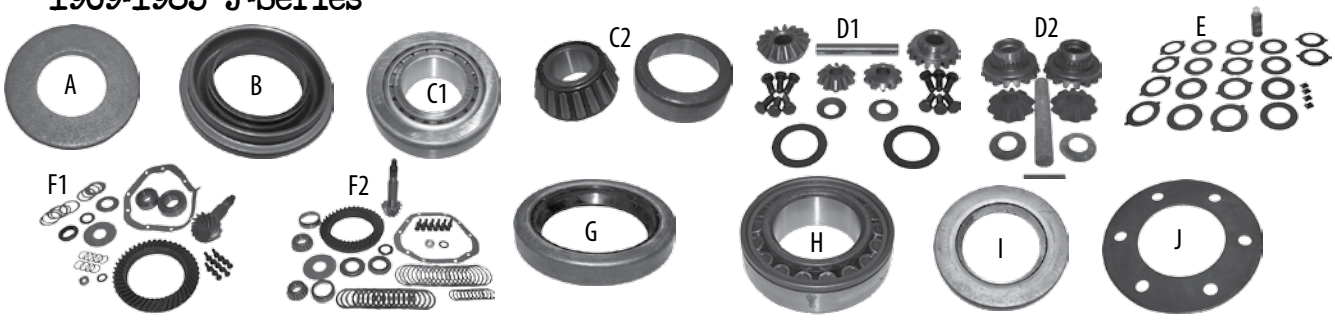

Item #	Description	Application	Comments	Replaced Part #
A	Washer, Pinion	All		J4004913
B	Seal, Pinion	All		J8134810
C1 C2	Pinion Bearing Kit	All All	Inner Outer	J8124026 J8124027
D1 D2	Gear Set, Differential	Dana 60-2 Dana 60-3	Standard Trac-Lok	J8129241 J8129240
E	Disc Kit, Differential	All	Trac-Lok	J8122379
F1 F2	Ring & Pinion Set	All All	3.54 Ratio 4.10 Ratio	8130014 J8129235
G	Seal, Axle	Dana 60-2	Inner	J0994904
H	Bearing, Axle Shaft	Dana 60-2		J0994913
I	Seal, Hub	Dana 60-3	Inner	J5352786
J	Axle Retainer	All	w/ Semi-Float Rear Axle ONLY	J0994911

Copyright © 2014 Crown Automotive Sales Co., Inc. All rights reserved.

CLUTCH

Models w/ L&F Head 2.2L (4-134) Engine
MB, M38, M38-A1, CJ-2A, 3A, 3B, 5, 6
C101 Commando, Willys Station Wagon & Pickup, FC-150 2-2

Models w/ 2.5L (S4-151) GM Engine
1980-1983 CJ-5, 7, 8. 2-4

Models w/ 3.7L (V6-225) Engine
1965-1971 CJ-5, 6
1967-1971 C101 Commando. 2-6

Models w/ 3.7L (S6-226) Engine
1954-1964 Willys Station Wagon
1954-1662 Willys Pickup
1957-1964 FC-170 2-8

Models w/ 3.8L (S6-230), 3.8L (S6-232), 4.2L (S6-258) Engines
3.8L (S6-232): 1966-1978 CJ-5, 6; 1965-1970 SJ, J-Series
4.2L (S6-258): 1972-1983 CJ-5, 6, 7, 8, SJ, J-Series
3.8L (S6-230): 1963-1965 SJ, J-Series 2-10

Models w/ 5.0L (V8-304), 5.9L (V8-360), 6.6L (V8-401) Engines
5.0L (V8-304): 1971-1981 CJ-5, 6, 7,8
5.9L (V8-360) : 1970-1991 SJ, J-Series
6.6L (V8-401): 1971-79 SJ, J-Series 2-12

Models w/ 5.4L (V8-327), 5.7L (V8-350) Engines
V8-5.4L (V8-327): 1965-1967 SJ, J-Series
V8-5.7L (V8-350): 1968-1971 SJ, J-Series. 2-15

Copyright © 2014 Crown Automotive Sales Co., Inc. All rights reserved.

Clutch Parts For Models w/ L&F-Head 2.2L (4-134) Engine

MB, M38, M38-A1, CJ-2A, 3A, 3B, 5, 6
CL01 Commando, Willys Station Wagon & Pickup, FC-150

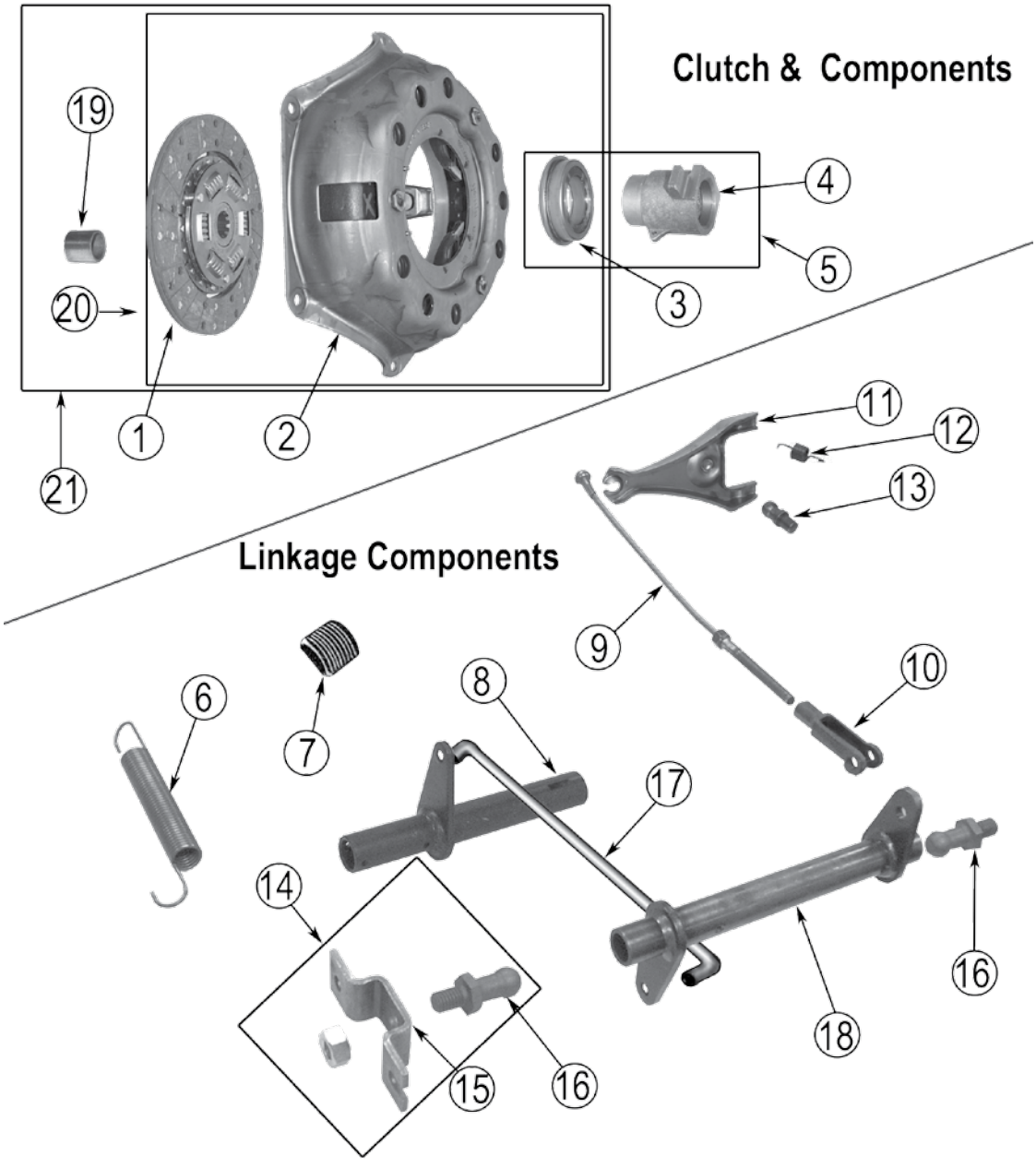

Copyright © 2014 Crown Automotive Sales Co., Inc. All rights reserved.

Clutch Parts For Models w/ L&F-Head 2.2L (4-134) Engine

Item #	Description	Engine	Application / Comments	Replaces Part #
1	Disc, Clutch	Both 2.2L (F4-134)	All w/ 8.5" All w/ 9.25" (Originally B&B)	J0930731 921977
2	Plate, Pressure	Both 2.2L (F4-134)	All w/ 8.5 All w/ 9.25" (Originally Auburn or Dana)	J0804746 J3216159
3	Bearing, Clutch Release	Both	All	J0991720
4	Sleeve, Clutch Throwout Bearing	Both	All	J0644366
5	Sleeve & Bearing, Clutch Throwout Lever	Both	All	J0945255
6	Spring, Clutch Pedal Return	2.2L (L4-134) 2.2L (F4-134) 2.2L (F4-134) 2.2L (F4-134)	All CJ-3B, 5, 6, M38-A1 475 Wagon, Truck FC-150	J0641723 J0641723 J0641723 J0641727
7	Pad, Clutch Pedal	2.2L (F4-134)	CJ-3B, 5, 6	J5363508
8	Shaft, Clutch Pedal	Both	MB, CJ-2A, 3A, 3B, 5,6, M38, M38-A1	A495
9	Cable, Clutch Release	2.2L (F4-134) 2.2L (F4-134) 2.2L (F4-134) Both Both	C101 Commando w/ T86 Transmission (49-3/16" long) FC-150 w/ T90 Transmission (Cross Shaft to Throwout Lever) FC-150 w/ T90 Transmission (Cross Shaft to Throwout Lever) CJ-2A, 3A, 3B, 5, 6, (Bellcrank to Throwout Lever; 11" long) M38 to serial #74419 (Bellcrank Throwout Lever)	J0942612 J0948726 J0942622 J0948726 J0948726
10	Yoke	Both	MB, CJ2A, 3A, 3B, 5,6, M38, M38-A1	J0632177
11	Fork, Clutch Throwout	Both Both	All Except Station Wagon, Pickup Truck, Sedan Delivery, VJ Jeepster Station Wagon, Pickup Truck, Sedan Delivery, VJ Jeepster	J0630112 641275
12	Spring, Clutch Throwout Release Fork	Both		J0630117
13	Fulcrum, Clutch Throwout Fork	Both		J0630068
14	Stud & Bracket, Clutch Release, Frame End	Both	CJ-2A, 3A, 3B, 5, 6; FC150, MB, M38, M38-A1 w/ T90 Transmission	JA000179
15	Bracket, Pivot	Both	CJ-2A, 3A, 3B, 5, 6; FC150, MB, M38, M38-A1	A180
16	Pivot, Clutch Release	Both	CJ-2A, 3A, 3B, 5, 6; FC150, MB, M38, M38-A1 w/ T90 Transmission	JA000181
17	Rod, Bellcrank to Clutch Pedal Shaft	Both	M38-A1, CJ-2A, 3A, 3B, 5, 6 (10.5" Long)	J0991143
18	Bellcrank, Clutch Release	Both 2.2 (L4-134)	CJ-2A, 3A, 3B, 5, 6, FC-150, MB, M38, M38-A1 w/ 8-1/2" Clutch CJ-3B, 5, 6, FC-150 w/ 9-1/4" Clutch	642624 922076
19	Bushing, Pilot	Both	All	J0639578
20	Clutch Kit (For 8.5" Clutches)	Both	Includes Pressure Plate, Disc, & Throwout Bearing	930731K
21	Clutch Kit (For 9.25" Clutches)	Both	Includes Pressure Plate, Disc, Throwout Bearing, & Pilot Bearing	921977K

Copyright © 2014 Crown Automotive Sales Co., Inc. All rights reserved.

Clutch Parts For Models w/2.5L (S4-151) GM Engine

1980-1983 CJ-5, 7, 8

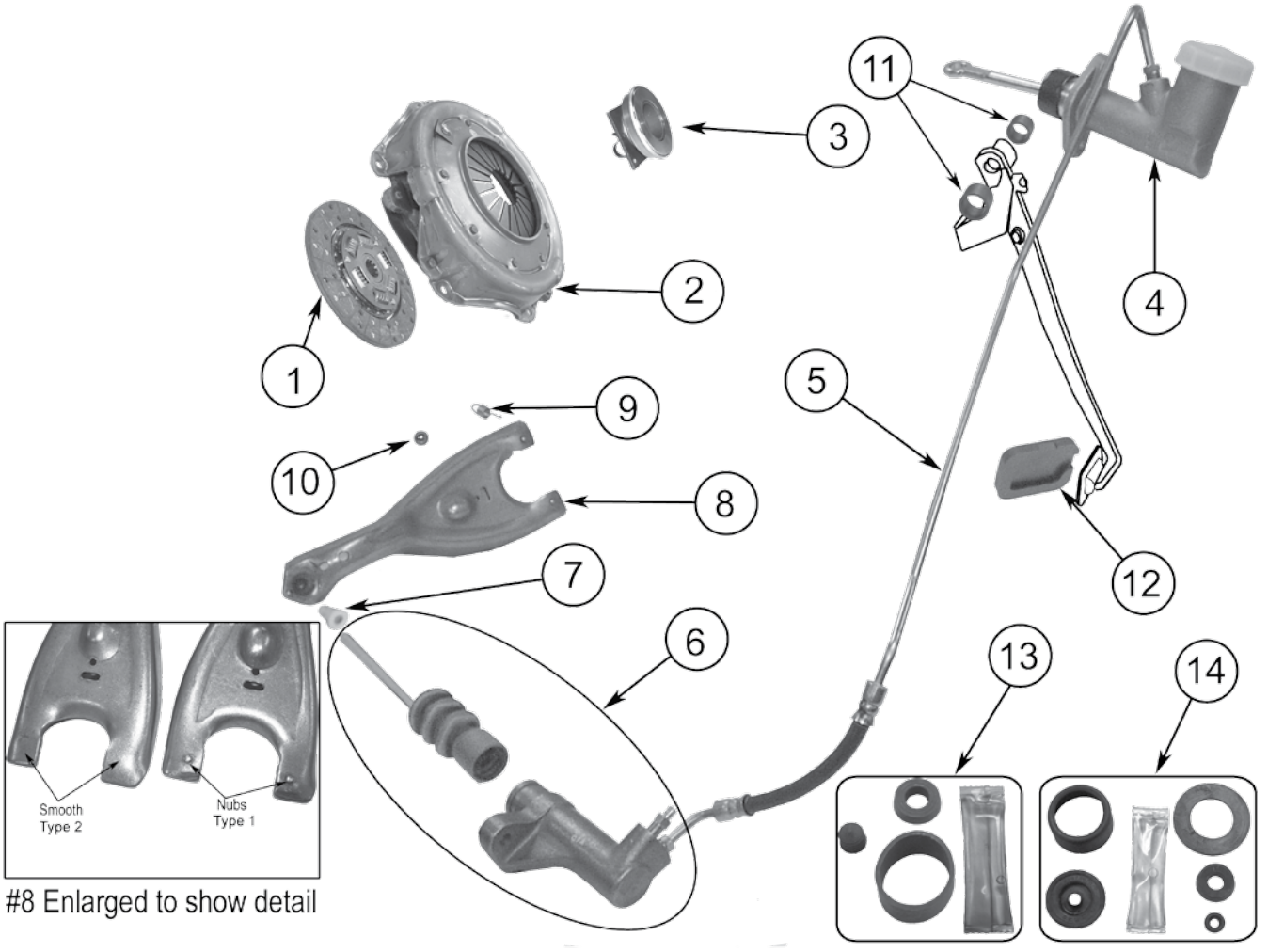

#8 Enlarged to show detail

Copyright © 2014 Crown Automotive Sales Co., Inc. All rights reserved.

Clutch Parts For Models w/ 2.5L (S4-151) GM Engine

Item #	Description	Application	Replaces Part #
1	Disc, Clutch	All	J8132577
2	Plate, Pressure	All	J8132576
3	Bearing, Throwout	1980 Before VIN 40992, Use w/ Type 1 Fork 1980 After VIN 40992, Use w/ Type 2 Fork 1981-83	J3241263 J5361614 J5361614
4	Cylinder Assembly, Clutch Master	All	J5359822
5	Tube, Clutch, Master Cylinder To Slave Cylinder	All	53004164
6	Cylinder Assembly, Clutch Slave	All	J3241867
7	Pivot, Throwout Fork	All	J3217479
8	Fork, Throwout	1980 Before VIN 40992, w/ Nubs, Type 1 1980 After Vin 40992 w/out Nubs, Type 2 81-83	J3224192 J5361620 J5361620
9	Spring, Clutch Throwout Lever	All	J3222799
10	Ball, Throwout Lever	All	J0169162
11	Bushing, Clutch Pedal	All	J0946177
12	Pad, Clutch Pedal	All	J5363508
13	Repair Kit, Clutch Slave Cylinder	All	J8132782
14	Repair Kit, Clutch Master Cylinder	All	J8132781

Copyright © 2014 Crown Automotive Sales Co., Inc. All rights reserved.

Clutch Parts For Models w/ V6-225 Engine

1965-1971 CJ-5, 6
1967-1971 C101 Commando

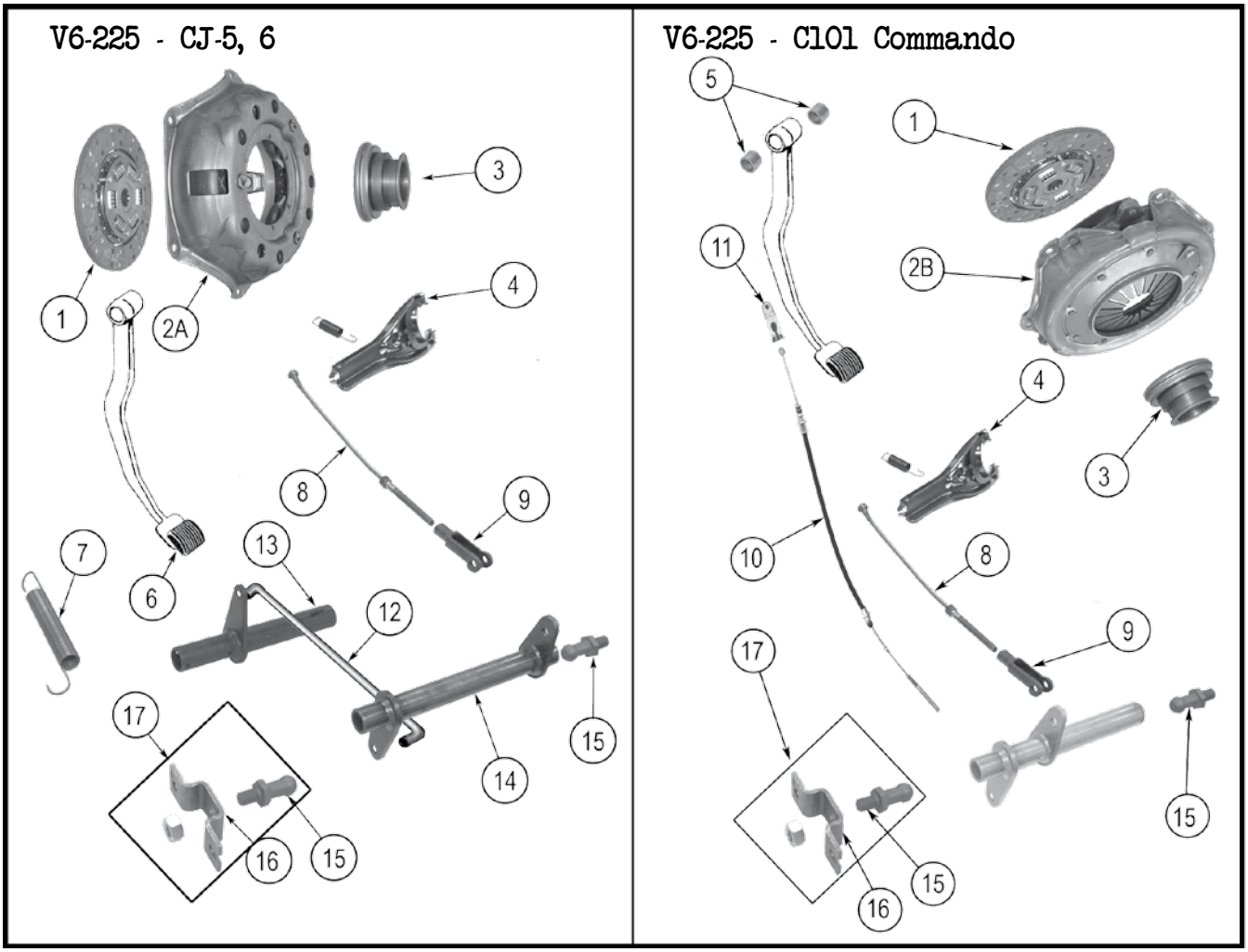

Copyright © 2014 Crown Automotive Sales Co., Inc. All rights reserved.

Clutch Parts For Models w/ V6-225 Engine

Item #	Description	Application / Comments	Replaces Part #
1	Disc, Clutch	All	53008259
2A	Plate, Pressure	All (Dana 10-1/2"); Finger Type	J4485750
2B	Plate, Pressure	All (B&B 10-1/2"); Diaphragm Type	J0948692
3	Bearing & Carrier, Clutch Throwout	All	J0991186
4	Fork, Clutch Throwout	All	J1378486
5	Bushing, Clutch Pedal	Commando (2 Required)	J0946177
6	Pad, Clutch Pedal	All (Except C101 Commando)	J5363508
7	Spring, Clutch Pedal Return	All (Except C101 Commando)	J0641723
8	Cable, Bellcrank to Throwout Lever	All (13-5/8" Long) All (14-1/4" Long)	J0942622 J0947224
9	Yoke	All	J0632177
10	Cable, Clutch Release	CJ-5, CJ-6 w/ T86, T14 Transmission w/ Diaphragm Style Pressure Plate; (58-1/4" Long) C101 w/ T86 Transmission w/ Diaphragm Style Pressure Plate (49-3/16" long); Cable adjustment at Pedal end C101 w/ T86 Transmission (84-1/4" long); Cable adjustment at Throwout Lever	J0992533 J0942612 J0994759
11	Clevis	C101	J0948416
12	Rod, Clutch Pedal Shaft to Bellcrank	CJ-5, CJ-6 (8-7/8" Long) CJ-5, CJ-6 (9-3/4" Long) M38-A1, CJ-2A, 3A, 3B, 5, 6, (10.5" Long)	J0911814 J0947223 J0991143
13	Shaft, Clutch Pedal	CJ-5, CJ-6	A495
14	Bellcrank	CJ-5, CJ-6	J0941232
15	Stud, Clutch Release	All	JA000181
16	Bracket, Pivot	CJ-5, CJ-6 w/ T86, T14 Transmission	A180
17	Stud & Bracket, Clutch Release, Frame End	CJ-5, CJ-6 w/ T86, T14 Transmission	JA000179

Copyright © 2014 Crown Automotive Sales Co., Inc. All rights reserved.

Clutch Parts For Models w/ V6-226 Engine

1954-1964 Willys Station Wagon

1954-1662 Willys Pickup

1957-1964 FC-170

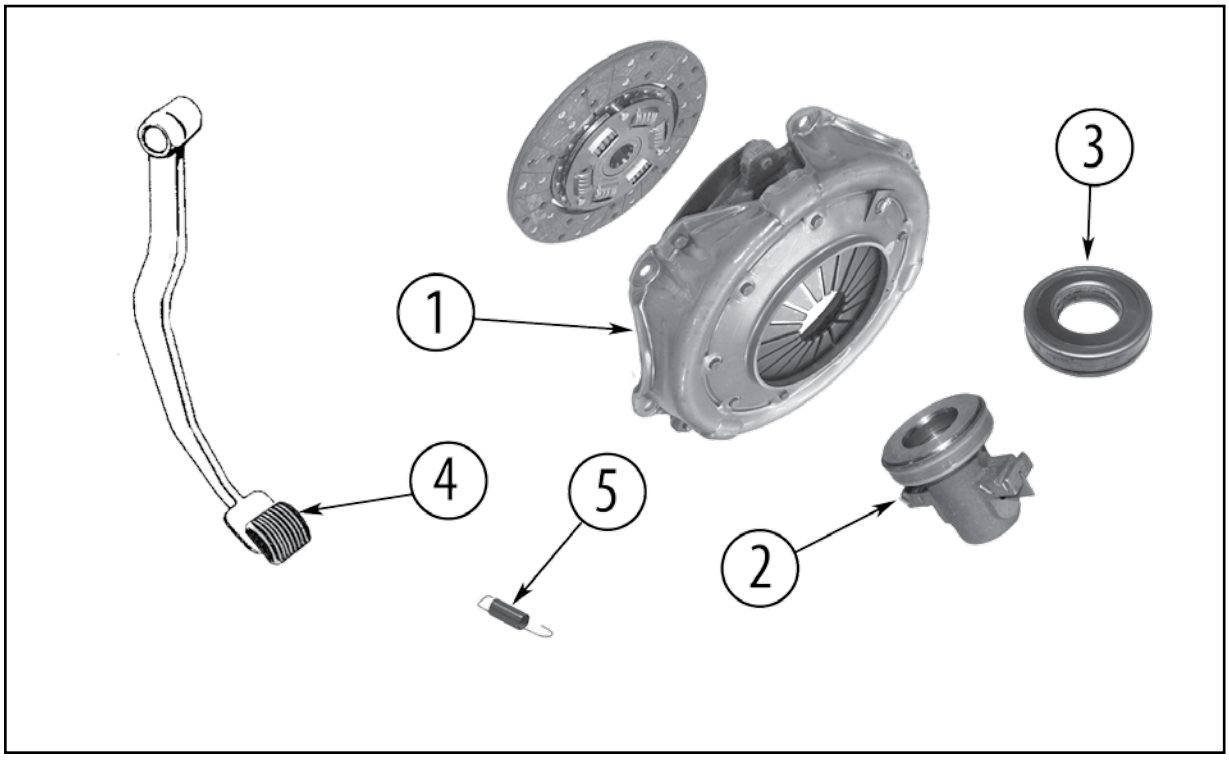

Copyright © 2014 Crown Automotive Sales Co., Inc. All rights reserved.

Clutch Parts For Models w/ V6-226 Engine

Item #	Description	Application / Comments	Replaces Part #
1	Plate, Pressure	All	J3184908
2	Sleeve w/ Bearing, Clutch Release	All	J0732698
3	Bearing, Clutch Release	All	J0700003
4	Pad, Clutch Pedal	FC-170	J5363508
5	Spring, Clutch Pedal Return	Station Wagon, Pickup FC-170	J0641723 J0641727

Copyright © 2014 Crown Automotive Sales Co., Inc. All rights reserved.

Clutch Parts for Models w/ 3.8L S6-230), 3.8L (S6-232), 4.2L (S6-258) Engines, 1963-1986

3.8L (S6-232): 1966-1978 CJ-5,6; 1965-1970 SJ, J-Series
4.2L (S6-258): 1972-1983 CJ-5, 6, 7, 8, SJ, J-Series
3.8L (S6-230): 1963-1965 SJ, J-Series

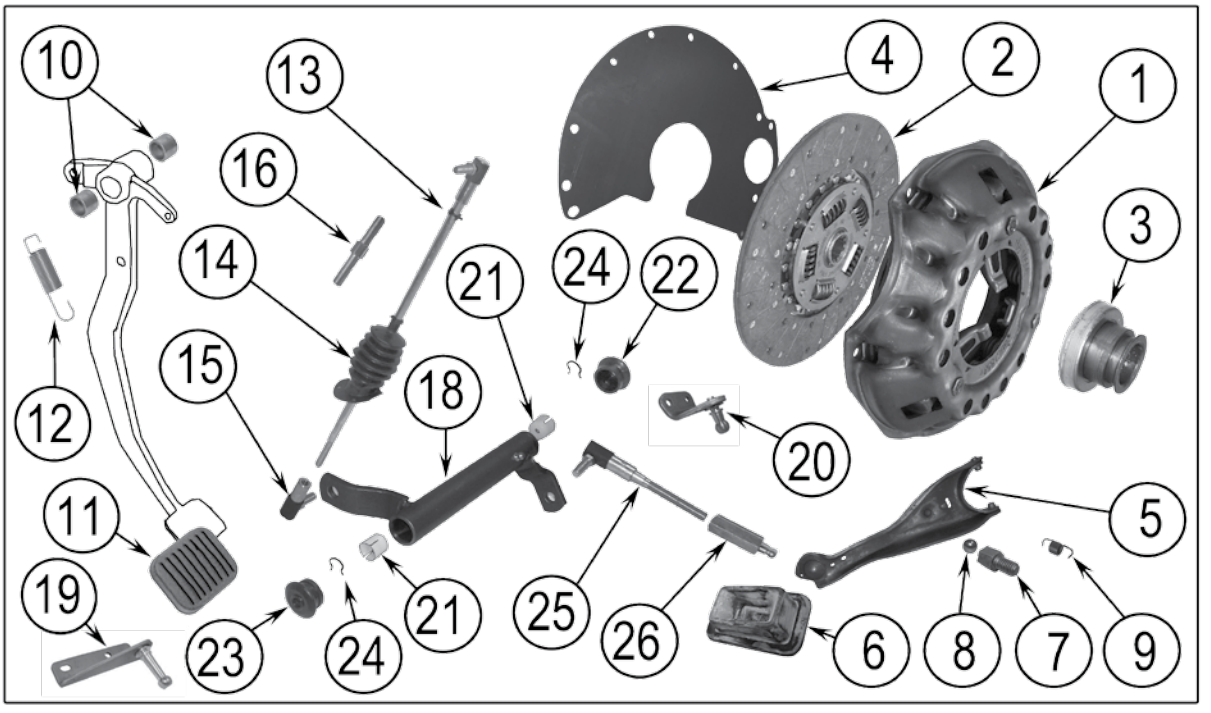

Item #	Description	Engine	Year	Application / Comment	Replaces Part#
1	Plate, Pressure	3.8L (S6-230) 3.8L (S6-230) 3.8L (S6-232), 4.2L (S6-258) 3.8L (S6-232), 4.2L (S6-258)	All All 1965-81 1978-81	w/ 9.25" Clutch w/ 10" or 10.5" Clutch w/ 10" or 10.5" Clutch w/ 11" Clutch	J3216159 J3184908 J3184908 J5357436
2	Disc, Clutch	3.8L (S6-232), 4.2L (S6-258) 3.8L (S6-232), 4.2L (S6-258) 4.2L (S6-258) 3.8L (S6-232), 4.2L (S6-258) 3.8L (S6-232), 4.2L (S6-258)	1965-75 1976-79 1980-86 1965-86 1978-81	CJ-5, CJ-6 CJ-5, CJ-7 CJ-5, CJ-7 SJ, J-Series w/ 11" Clutch	53008259 J5354689 53008259 53008259 J3184867
3	Bearing, Clutch Throwout	3.8L (S6-230) 3.8L (S6-232), 4.2L (S6-258) 3.8L (S6-232), 4.2L (S6-258) 4.2L (S6-258) 3.8L (S6-232), 4.2L (S6-258) 4.2L (S6-258) 4.2L (S6-258)	All 1972-75 1976-80 1981-86 1965-77 1978-79 1980-86	SJ, J-Series CJ-5, CJ-6 CJ-5, CJ-7 CJ-5, CJ-7, CJ-8 SJ, J-Series SJ, J-Series SJ, J-Series	J0732698 J5356918 J3241263 J5361614 J5356918 J3190517 J5361614
4	Spacer, Clutch Housing to Engine	3.8L (S6-232), 4.2L (S6-258)	1972-86		J3213743
5	Fork, Clutch Throwout	3.8L (S6-232), 4.2L (S6-258) 3.8L (S6-232), 4.2L (S6-258) 4.2L (S6-258) 4.2L (S6-258)	1973-75 1976-79 1973-79 1980-86	CJ-5, CJ-6 CJ-5, CJ-7 SJ, J-Series All	J3217480 J3224192 J3217480 J5361620

Copyright © 2014 Crown Automotive Sales Co., Inc. All rights reserved.

Clutch Parts for Models w/ 3.8L S6-230), 3.8L (S6-232), 4.2L (S6-258) Engines, 1963-1986

Item #	Description	Engine	Years	Models	Replace Part #
6	Boot, Clutch Fork	3.8L (S6-232), 4.2L (S6-258) 3.8L (S6-232), 4.2L (S6-258) 4.2L (S6-258)	1972-75 1976-79 1980-86	CJ-5, CJ-6 CJ-5, CJ-7 CJ-5, CJ-7, CJ-8	J3173646 J3180370 3236453
7	Pivot, Clutch Throwout	3.8L (S6-232), 4.2L (S6-258) 3.8L (S6-232), 4.2L (S6-258) 4.2L (S6-258)	1972-75 1965-73 1974-80	CJ-5, CJ-6 SJ, J Series SJ, J Series	J3173474 J3173474 J3173474
8	Ball, Throwout Lever	3.8L (S6-232), 4.2L (S6-258) 4.2L (S6-258)	1972-86 1971-86	CJ-5, CJ-6, CJ-7, CJ-8 SJ, J-Series	J0169162 J0169162
9	Spring, Throwout Lever Release	3.8L (S6-232), 4.2L (S6-258) 3.8L (S6-232), 4.2L (S6-258)	1972-75 1976-86	CJ-5, CJ-6 CJ-5, CJ-7, CJ-8	J3199503 J3222799
10	Bushing, Clutch Pedal	3.8L (S6-230) 3.8L (S6-232), 4.2L (S6-258) 4.2L (S6-258) 3.8L (S6-232), 4.2L (S6-258)	1963-65 1966-81 1982-86 1965-86	SJ, J-Series CJ-5, CJ-7, CJ-8 CJ-5, CJ-7, CJ-8 SJ, J-Series	J0946177 J0949169 J0946177 J0949169
11	Pad, Clutch Pedal	3.8L (S6-232), 4.2L (S6-258) 3.8L (S6-230), 3.8L (S6-232), 4.2L (S6-258)	1968-86 1965-90	CJ-5, CJ-6, CJ-7, CJ-8 SJ, J-Series	J5363508 J5363508
12	Spring, Clutch Pedal Return	3.8L (S6-232), 4.2L (S6-258) 4.2L (S6-258)	1972-86 1973-86	CJ-5, CJ-6, CJ-7, CJ-8 SJ, J-Series	J5351118 J5351118
13	Rod, Clutch Pedal to Bellcrank	3.8L (S6-232), 4.2L (S6-258) 3.8L (S6-232), 4.2L (S6-258) 4.2L (S6-258) 4.2L (S6-258)	1972-75 1976-86 1973-75 1980-86	CJ-5, CJ-6 CJ-5, CJ-7, CJ-8 SJ; 18-5/8" Long SJ, J-Series	J5351302 J5364620 J5351302 J5359903
14	Boot, Clutch Release Rod	3.8L (S6-232), 4.2L (S6-258)	1972-75	CJ-5, CJ-6	5351375
15	Ball Joint, Adjusting Link	3.8L (S6-232), 4.2L (S6-258) 3.8L (S6-232), 4.2L (S6-258)	1965-75 1972-75	J-Series CJ-5, CJ-6	J8126777 J8126777
16	Adjuster, Clutch Pedal to Bellcrank Rod	All	1975-86	SJ, J-Series	J5355063
17	Adjuster, Clutch Wear	4.2L (S6-258) 4.2L (S6-258)	1972-80 1981-86	CJ-5, CJ-6, CJ-7	J5351209 J5359735
18	Bellcrank	3.8L (S6-232), 4.2L (S6-258) 3.8L (S6-232), 4.2L (S6-258) 4.2L (S6-258)	1972-75 1976-86 1975-79	CJ-5, CJ-6 CJ-5, CJ-7, CJ-8 J-Series w/ 8" Transmission Gear Shift Rod	J5354659 J5364621 J5354027
19	Bracket & Pivot, Bellcrank, Outer	4.2L (S6-258)	1976-86	CJ-5, CJ-7, CJ-8	J5355339
20	Bracket & Pivot, Bellcrank, Inner	4.2L (S6-258) 4.2L (S6-258)	1976-86 1980-86	CJ-5, CJ-7, CJ-8 SJ, J-Series	J5360112 J0944666
21	Bushing, Bellcrank	All	1972-86	Inner or Outer	J3167067
22	Boot, Clutch Pivot, Inner	3.8L (S6-232), 4.2L (S6-258) 3.8L (S6-232), 4.2L (S6-258)	1972-86 1965-86	CJ-5, CJ-6, CJ-7, CJ-8 SJ, J-Series	J3167049 J3167049
23	Boot, Clutch Pivot, Outer	3.8L (S6-232), 4.2L (S6-258) 3.8L (S6-232), 4.2L (S6-258)	1972-86 1965-86	CJ-5, CJ-6, CJ-7, CJ-8 SJ, J-Series	J3170937 J3167049
24	Retainer, Bellcrank Boot, Inner	All	1972-86		J3169769
25	Rod, Bellcrank to Throwout Fork	3.8L (S6-232), 4.2L (S6-258) 3.8L (S6-232), 4.2L (S6-258) 3.8L (S6-232), 4.2L (S6-258) 4.2L (S6-258) 4.2L (S6-258)	1972-75 1974-75 1976-79 1979-86 1974-79	CJ-5, CJ-6; 5-3/8" Long CJ-5, CJ-6; 6" Long CJ-5, CJ-7 w/ Nut-Type Attachment CJ-5, CJ-7, CJ-8 w/ Pin-Type Attachment SJ, J-Series w/ Nut-Type Attachment	J5351275 J5354703 J8126668 J5359943 J5351274
26	Adjuster, Clutch Wear	All All	1972-80 1981-86		J5351209 J5359735
27	Flywheel (Not Shown In Diagram)	4.2L (S6-258) 4.2L (S6-258)	1982-86 1982-86	CJ-5, 7, 8 SJ, J-Series	J3240094 J3240094

Copyright © 2014 Crown Automotive Sales Co., Inc. All rights reserved.

Clutch Parts for Models w/5.0L (V8-304), 5.9L (V8-360), 6.6L (V8-401) Engines

5.0L (V8-304): 1971-1981 CJ-5, 6, 7,8
5.9L (V8-360): 1970-1991 SJ, J-Series
6.6L (V8-401): 1971-1979 SJ, J-Series

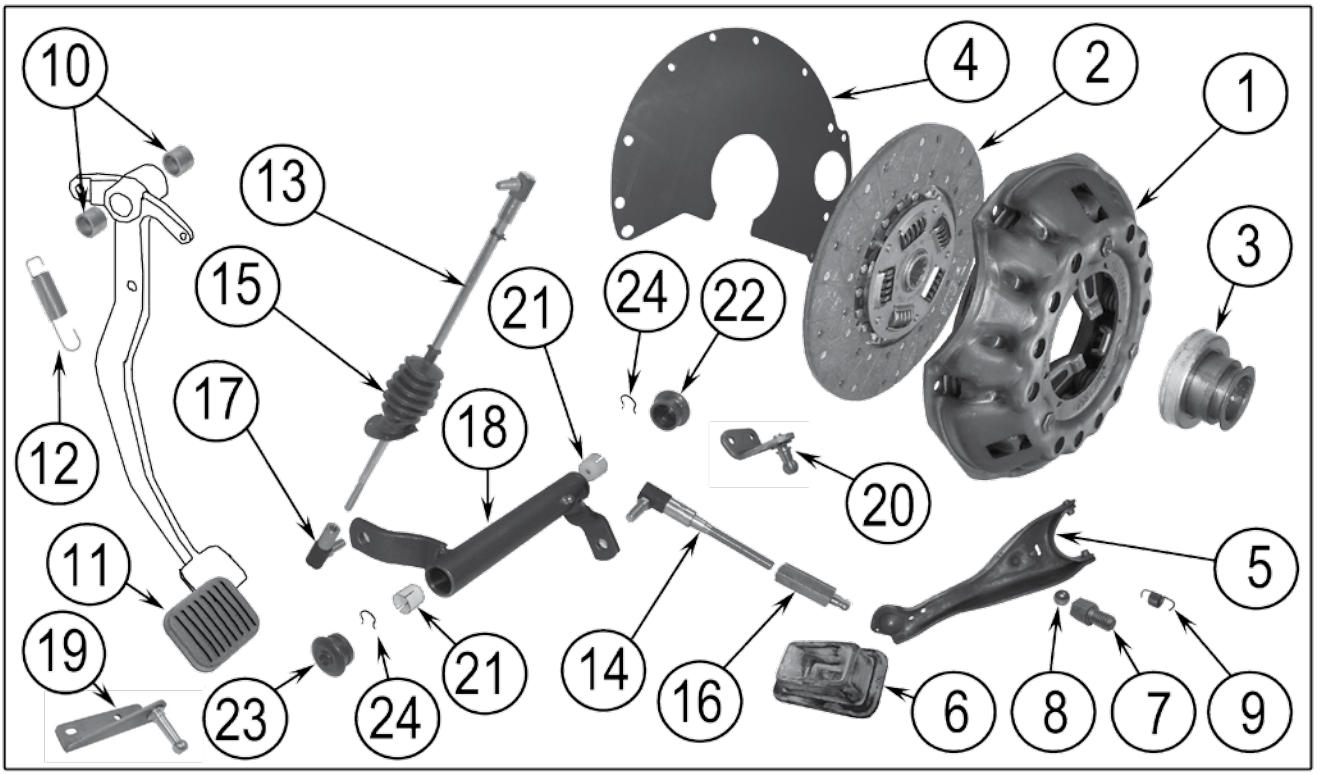

Item #	Description	Engine	Year	Application / Comment	Replaces Part#
1	Plate, Pressure	5.0L (V8-304)	1972-81	CJ-5, CJ-6, CJ-7, CJ-8 w/ 10.5" Clutch	J3184908
		5.0L (V8-304)	1971-81	CJ-5, CJ-6, CJ-7, CJ-8 w/ 11" Clutch	J5357436
		5.9L (V8-360) , 6.6L (V8-401)	1972-79	SJ, J-Series w/ 10.5" Clutch	J3184908
		5.9L (V8-360) , 6.6L (V8-401)	1971-79	SJ, J-Series w/ 11" Clutch	J5357436
		5.9L (V8-360)	1980-90	SJ, J-Series w/ 11" Clutch	J5357436
2	Disc, Clutch	5.0L (V8-304)	1972-75	CJ-5, CJ-6 w/ 10.5" Clutch	53008259
		5.0L (V8-304)	1976-79	CJ-5, CJ-7 w/ 10.5" Clutch	J5354689
		5.0L (V8-304)	1972-81	CJ-5, CJ-6, CJ-7 w/ 11" Clutch	J3184867
		5.0L (V8-304)	1980-81	CJ-5, CJ-7, CJ-8 w/ 10.5" Clutch	53008259
		5.9L (V8-360) , 6.6L (V8-401)	1972-75	SJ, J-Series w/ 10.5" Clutch	53008259
		5.9L (V8-360) , 6.6L (V8-401)	1976-79	SJ, J-Series w/ 10.5" Clutch	J5354689
		5.9L (V8-360)	1980-90	SJ, J-Series w/ 11" Clutch	J3184867

Copyright © 2014 Crown Automotive Sales Co., Inc. All rights reserved.

Clutch Parts for Models

w/5.0L (V8-304), 5.9L (V8-360), 6.6L (V8-401) Engines

Item #	Description	Engine	Year	Application / Comment	Replaces Part#
3	Bearing, Clutch Throwout	5.0L (V8-304) 5.0L (V8-304) 5.0L (V8-304) 5.0L (V8-304) 5.9L (V8-360) , 6.6L (V8-401) 5.9L (V8-360)	1972-75 1976-80 1981 1972-81 1971-79 1980-90	CJ-5, CJ-6 w/ 10.5" Clutch CJ-5, CJ-7 w/ 10.5" Clutch CJ-5, CJ-7, CJ-8 w/ 10.5" Clutch CJ-5, CJ-6, CJ-7, CJ-8 w/ 11" Clutch SJ, J-Series SJ, J-Series	J5356918 J3241263 J5361614 J3190517 J3190517 J5361614
4	Spacer, Clutch Housing to Engine	All	1971-90		J3213743
5	Fork, Clutch Throwout	5.0L (V8-304) 5.0L (V8-304) 5.0L (V8-304) 5.9L (V8-360) , 6.6L (V8-401) 5.9L (V8-360)	1973-75 1976-79 1980-81 1973-79 1980-90	CJ-5, CJ-6 CJ-5, CJ-7 CJ-5, CJ-7, CJ-8 SJ, J-Series SJ, J-Series	J3217480 J3224192 J5361620 J3217480 J5361620
6	Boot, Clutch Fork	5.0L (V8-304) 5.0L (V8-304) 5.0L (V8-304)	1972-75 1976-79 1980-81	CJ-5, CJ-6 CJ-5, CJ-7 CJ-5, CJ-7, CJ-8	J3173646 J3180370 3236453
7	Pivot, Clutch Throwout	5.0L (V8-304) 5.9L (V8-360) , 6.6L (V8-401)	1972-81 1971-90	CJ-5, CJ-6, CJ-7, CJ-8 SJ, J-Series	J3173474 J3173474
8	Ball, Throwout Lever	5.0L (V8-304) 5.9L (V8-360) , 6.6L (V8-401)	1972-81 1971-90	CJ-5, CJ-6, CJ-7, CJ-8 SJ, J-Series	J0169162 J0169162
9	Spring, Throwout Lever Release	5.0L (V8-304) 5.0L (V8-304) 5.9L (V8-360) , 6.6L (V8-401) 5.9L (V8-360)	1972-75 1976-81 1971-79 1980-90	CJ-5, CJ-6 CJ-5, CJ-7, CJ-8 SJ, J-Series SJ, J-Series	J3199503 J3222799 J3199503 J3222799
10	Bearing, Clutch Pedal	All	1971-90		J0949169
11	Pad, Clutch Cover	All	1971-90		J5363508
12	Spring, Clutch Pedal Return	5.0L (V8-304) 5.9L (V8-360) , 6.6L (V8-401)	1972-81 1974-90	CJ-5, CJ-6, CJ-7, CJ-8 SJ, J-Series	J5351118 J5351118
13	Rod, Clutch Pedal to Bellcrank	5.0L (V8-304) 5.0L (V8-304) 5.9L (V8-360) , 6.6L (V8-401) 5.9L (V8-360) , 6.6L (V8-401) 5.9L (V8-360)	1972-75 1976-81 1973-75 1973-79 1980-90	CJ-5, CJ-6 CJ-5, CJ-7, CJ-8 SJ, J-Series; 15-9/16" Long; Upper SJ, J-Series; 18-5/8" Long; Upper SJ, J-Series; Upper	J5351302 J5364620 J5351144* J5351302 J5359903
14	Rod, Bellcrank to Fork	5.0L (V8-304) 5.0L (V8-304) 5.0L (V8-304) 5.0L (V8-304) 5.9L (V8-360) , 6.6L (V8-401) 5.9L (V8-360) , 6.6L (V8-401)	1972-75 1974-75 1976-79 1979-81 1971-79 1979	CJ-5, CJ-6; 5-3/8" Long CJ-5, CJ-6; 6" Long CJ-5, CJ-7; Nut-Type Attachment CJ-5, CJ-7, CJ-8; Pin-Type Attachment SJ, J-Series; Nut-Type Attachment SJ, J-Series; Pin-Type Attachment	J5351275 J5354703 J8126668 J5359943 J5351211 J5359937*

Continued on Next Page

* Not Currently Available

Copyright © 2014 Crown Automotive Sales Co., Inc. All rights reserved.

(Continued)

Clutch Parts for Models w/5.0L (V8-304), 5.9L (V8-360), 6.6L (V8-401) Engines

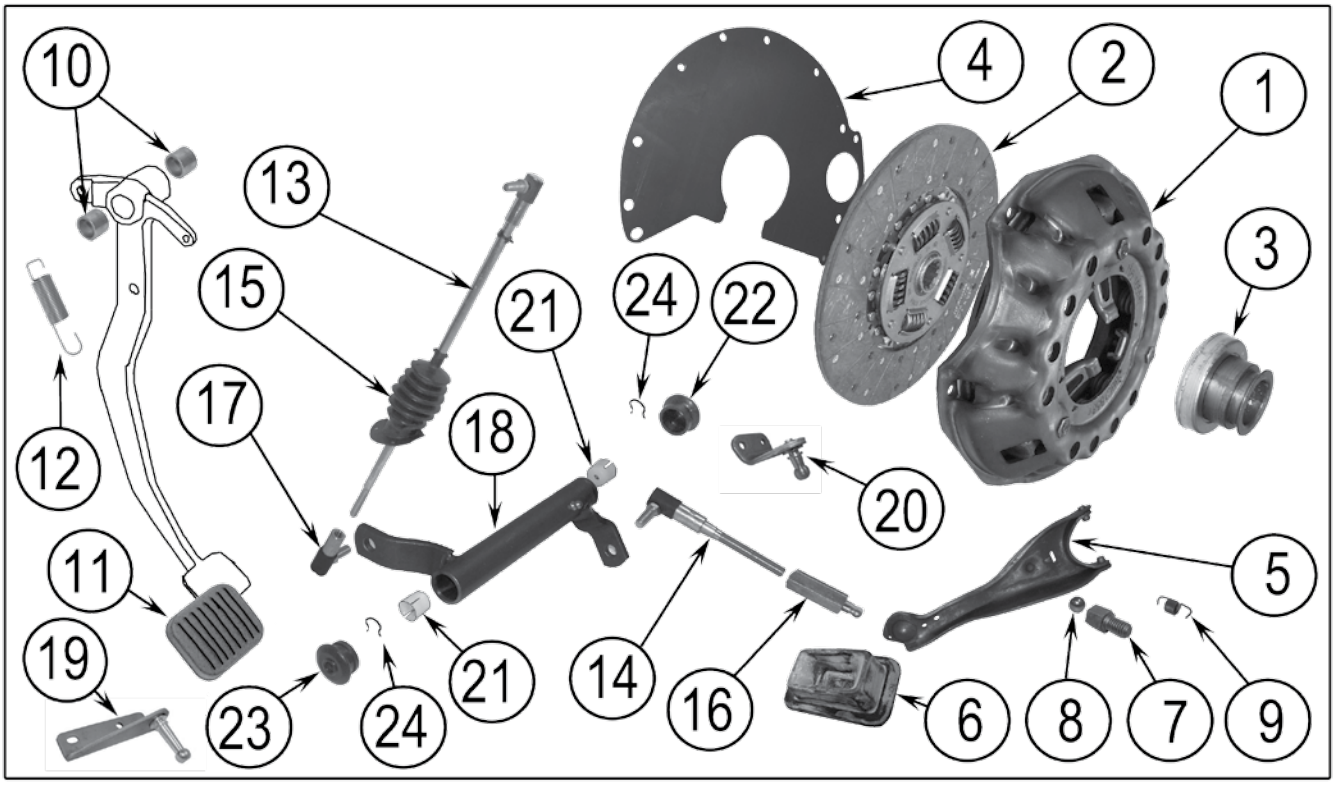

Item #	Description	Engine	Year	Application / Comment	Replaces Part#
15	Boot, Clutch Rod	5.0L (V8-304)	1976-81	CJ-5, CJ-7, CJ-8	5355322
16	Adjuster (Link), Clutch Release Rod	5.0L (V8-304) 5.0L (V8-304) 5.9L (V8-360) , 6.6L (V8-401) 5.9L (V8-360)	1972-80 1981 1974-80 1981-90	CJ-5, CJ-6, CJ-7 CJ-5, CJ-7, CJ-8 SJ, J-Series SJ, J-Series	J5351209 J5359735 J5351209 J5359735
17	Ball Joint, Adjusting Link	5.0L (V8-304)	1972-75	CJ-5, CJ-6	J8126777
18	Bellcrank	5.0L (V8-304) 5.0L (V8-304)	1972-75 1976-81	CJ-5, CJ-6 CJ-5, CJ-7, CJ-8	J5354659 J5364621
19	Bracket & Pivot, Bellcrank, Outer	5.0L (V8-304)	1976-81	CJ-5, CJ-7, CJ-8	J5355339
20	Bracket & Pivot, Bellcrank, Inner	5.0L (V8-304)	1976-81	CJ-5, CJ-7, CJ-8	J5360112
21	Bushing, Bellcrank	All	1972-90	Inner or Outer	J3167067
22	Boot, Bellcrank, Inner	All	1972-90		J3167049
23	Boot, Bellcrank, Outer	All	1972-90		J3170937
24	Retainer, Bellcrank Boot	All	1972-90	Inner or Outer	J1369769

Copyright © 2014 Crown Automotive Sales Co., Inc. All rights reserved.

Clutch Parts For Models w/ 5.7L (V8-350) & 5.4L (V8-327) Engine

5.4L (V8-327): 1965-1967 SJ, J-Series
5.7L (V8-350): 1968-1971 SJ, J-Series

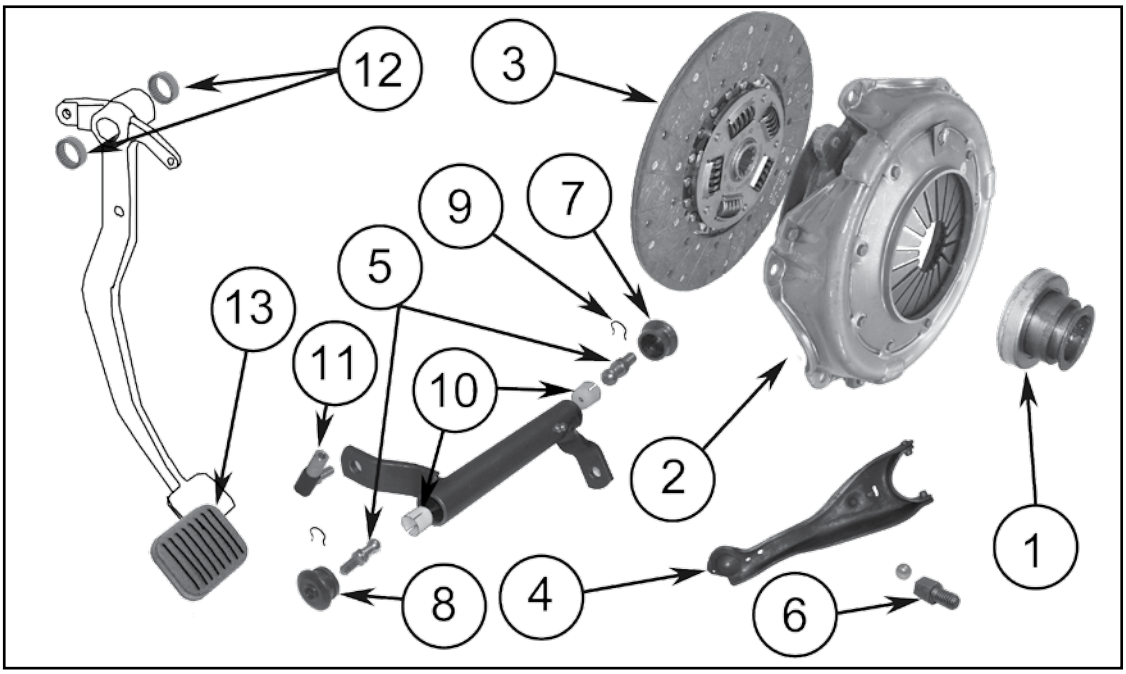

Item #	Description	Engine	Replaces Part #
1	Bearing & Carrier, Clutch Throwoout	5.7L (V8-350)	J0991186
2	Plate, Pressure	5.4L (V8-327)	J4485780
3	Disc, Clutch - 10"	5.4L (V8-327)	53008259
4	Lever, Clutch Throwout	5.4L (V8-327)	J3217480
5	Pivot, Throwout Lever	5.7L (V8-350)	J3173474
6	Pivot, Clutch Release	5.7L (V8-350)	J0944666
7	Boot, Bellcrank, Inner	5.7L (V8-350) 5.4L (V8-327)	J3167049 J3170937
8	Boot, Bellcrank, Outer	1968-70 - 5.7L (V8-350), 5.4L (V8-327) 1971 - 5.7L (V8-350), 5.4L (V8-327)	J3167049 J3170937
9	Clip, Bellcrank Boot Retaining	5.7L (V8-350), 5.4L (V8-327)	J3169769
10	Bushing, Bellcrank Pivot	5.7L (V8-350), 5.4L (V8-327)	J3167067
11	Ball Joint, Clutch Rod	5.7L (V8-350), 5.4L (V8-327)	J8126777
12	Bearing, Clutch Pedal	5.7L (V8-350), 5.4L (V8-327)	J0949169
13	Pad, Clutch Pedal	5.7L (V8-350), 5.4L (V8-327)	J5363508

Copyright © 2014 Crown Automotive Sales Co., Inc. All rights reserved.

NOTES:

Copyright © 2014 Crown Automotive Sales Co., Inc. All rights reserved.

COOLING

Radiators 3-2

Radiator Caps. 3-2

Water Pumps 3-2

Water Pump Impellers 3-3

Water Pump Gaskets 3-3

Radiator Bypass Hoses 3-3

Radiator Fan Blades 3-3

Fan Clutches 3-4

Engine Drive Belts 3-4

Radiator Hoses 3-5

Thermostats. 3-5

Thermostat Housings & Gaskets. 3-5

Copyright © 2014 Crown Automotive Sales Co., Inc. All rights reserved.

Radiators

Model	Year	Engine	Comments	Replaces Part #
CJ-5, 6, 7	1974-80	3.8L (6-232), 4.2L (6-258), or 5.0L (V8-304)	3-Core; Cap in the Center	J5361574
CJ-5, 7, 8	1981-86	4.2L (6-258)	2-Core	J5362492
CJ-5, 6, 7	1980-83	GM 2.5L (4-151)	2-Core	J5362898
SJ, J-Series	1980-86	4.2L (6-258)	2-Core	J5361576
SJ, J-Series	1971-79	5.9L (V8-360) or 6.6L (V8-401)	3-Core	J5357999
SJ, J-Series	1980-91	5.9L (V8-360)	3-Core	52003751

Radiator Caps

Model	Year	Engine	Comments	Replaces Part #
CJ-3B, 5, 6, C101 Commando, Pickup, Station Wagon	1950-71	2.2L (4-134) F-Head	7 lb. cap	J0648360
CJ-5, 6, 7, 8	1966-86	AMC 2.5L (4-150), GM 2.5L (4-151), V6-225, 3.8L (6-232), 4.2L (6-258), or 5.0L (V8-304)	16 lb. cap	52079880AA
C101 Commando, C104 Commando	1966-73	V6-225	16 lb. cap	52079880AA
FC-170, Station Wagon	1954-64	6-226	7 lb. cap	J0648360
SJ, J-Series	1963-65	6-230	7 lb. cap	J0648360
SJ, J-Series	1963-65	6-230	13 lb. cap	52079880AA
SJ, J-Series	1965-91	3.8L (6-232), 4.2L (6-258), 5.9L (V8-360), 6.6L (V8-401), V8-350, or V8-327	16 lb. cap	52079880AA

Water Pumps

Model	Year	Engine	Comments	Replaces Part #
MB, CJ-2A, 3A3, 3B, 5, 6, FC-150, C101 Commando, Pickup, VJ Jeepster, Station Wagon,	1941-66	2.2L (4-134) L or F-Head	w/ Single Groove Pulley; Includes Gasket	J8126774
CJ-3B, 5, 6, C101 Commando	1967-71	2.2L (4-134) L or F-Head	w/o Emission Pump, w/ Single Groove Pulley; Includes Gasket	J8126774
CJ-3B, 5, 6, C101 Commando	1967-71	2.2L (4-134) L or F-Head	w/ Emission Pump	J0945142
CJ-5, 6, 7	1975-79	3.8L (6-232) or 4.2L (6-258)		J8129459
CJ-5, 7, 8, SJ, J-Series	1983-86	AMC 2.5L (4-150) or 4.2L (6-258)	w/o Serpentine Belt	J8134320
CJ-5, 7, 8, SJ, J-Series	1983-86	AMC 2.5L (4-150) or 4.2L (6-258)	w/ Serpentine Belt	J8134321
CJ-5, 6, SJ, J-Series	1972	5.0L (V8-304) or 5.9L (V8-360)	Includes Gasket	J8122307
CJ-5, 6, 7, 8, SJ, J-Series	1973-91	5.0L (V8-304) or 5.9L (V8-360)	Includes Gasket	J3234427
CJ-5, 6, 7	1980-83	GM 2.5L (4-151)		J8136613
M38, M38A1	1950-63	2.2L (4-134) L or F-Head	w/ Single Groove Pulley; Includes Gasket	J8126774

Copyright © 2014 Crown Automotive Sales Co., Inc. All rights reserved.

Water Pump Impeller

Model	Year	Engine	Comments	Replaces Part #
All	1941-71	2.2L (4-134) L or F-Head		639993

Water Pump Gaskets

Model	Year	Engine	Replaces Part #
All	1941-71	2.2L (4-134) L or F-Head	637053
CJ-5, 6, 7, 8, C104 Commando, SJ, J-Series	1965-86	AMC 2.5L (4-150), 3.8L (6-232), or 4.2L (6-258)	J3173204
CJ-5, 6, 7, 8, C104 Commando, SJ, J-Series	1971-91	5.0L (V8-304), 5.9L (V8-360), 6.6L (V8-401)	J3181899

Radiator Bypass Hose

Model	Year	Engine	Replaces Part #
CJ-5, 6, 7, 8, C104 Commando, SJ, J-Series	1971-91	5.0L (V8-304), 5.9L (V8-360), 6.6L (V8-401)	J3182494

Radiator Fan Blades

Model	Year	Engine	Comments	Replaces Part #
MB, CJ-2A, 3A, 3B, M38, M38A1, Pickup, VJ Jeepster, Station Wagon	1941-68	2.2L (4-134) L or F-Head	4-Blade	J0802636
CJ-5, 6	1955-71	2.2L (4-134) F-Head	w/ 4-Blade Fan	J0802636
C101 Commando	1966-71	2.2L (4-134) F-Head	Before Serial #: 873	J0802636
CJ-5, 6, 7, SJ, J-Series	1965-80	3.8L (6-232) or 4.2L (6-258)	4-Blade	52002171
CJ-5, 7, 8, SJ, J-Series	1981-86	4.2L (6-258)	w/o Serpentine Belt w/ 4-Blade Fan	52002171
CJ-5, 6, 7, 8	1974-86	4.2L (6-258)	6-Blade	J0994277
CJ-5, 6, 7, 8, C104 Commando, SJ, J-Series	1971-91	5.0L (V8-304), 5.9L (V8-360), 6.6L (V8-401)	6-Blade	J0994277
SJ, J-Series	1979-86	4.2L (6-258)	w/ Heavy Duty Cooling; 6-Blade	J0994277

Copyright © 2014 Crown Automotive Sales Co., Inc. All rights reserved.

Fan Clutches

Model	Year	Engine	Comments	Replaces Part #
CJ-5, 6, 7, 8	1974-86	4.2L (6-258)	w/o Serpentine Belt	J5362170
CJ-5, 7, 8, SJ, J-Series	1981-86	4.2L (6-258)	w/ Serpentine Belt; Reverse Rotation	J3241858
CJ-5, 7, 8	1983-86	AMC 2.5L (4-150)	Includes Mounting Hardware	J5362722
CJ-5, 6, 7, 8, C104 Commando, SJ, J-Series	1974-91	5.0L (V8-304)	Includes Mounting Hardware	J5362722
SJ, J-Series	1981-86	4.2L (6-258)	w/o Serpentine Belt	J5362170

Engine Drive Belts

Model	Year	Engine	Comments	Function	Replaces Part #
M38, M38A1	1950-63	2.2L (4-134) L or F-Head	w/ Dual Fan Belts; Includes 2 belts	Fan & Generator	118866
ALL except M38, M38A1	1941-71	2.2L (4-134) L or F-Head		Fan & Generator	J0946707
CJ-5, 6, C104 Commando	1971-73	3.8L (6-232) or 4.2L (6-258)		Fan & Generator	JY013361
CJ-5, 6, C104 Commando	1974	3.8L (6-232) or 4.2L (6-258)		Fan & Alternator	J3229607
CJ-5, 6, 7	1975-76	3.8L (6-232) or 4.2L (6-258)		Fan & Alternator	JY013411
CJ-5, 7, 8	1977-86	4.2L (6-258)	w/o A/C	Fan & Alternator	JY013411
CJ-5, 7, 8	1981-86	4.2L (6-258)	w/ Factory Installed A/C; to Crank Pulley	Fan & Alternator	JY013411
SJ, J-Series	1981-86	4.2L (6-258)	w/o Factory Installed A/C	Fan & Alternator	JY013411
CJ-5, 6, C104 Commando	1971-75	5.0L (V8-304)		Fan & Alternator	JY013411
CJ-5, 7, 8	1977-81	5.0L (V8-304)	w/o A/C	Fan & Alternator	J3227691
CJ-5, 7, 8	1977-81	5.0L (V8-304)	w/ A/C	Fan & Alternator	JY013421
SJ, J-Series	1970-73	5.9L (V8-360) or 6.6L (V8-401)		Fan & Alternator	JY013411
SJ, J-Series	1974-75	5.9L (V8-360) or 6.6L (V8-401)	w/o Heavy Duty Cooling	Fan & Alternator	JY013411
SJ, J-Series	1976-81	5.9L (V8-360)	w/ Heavy Duty Cooling w/ A/C	Fan & Alternator	JY013421
SJ, J-Series	1976-79	6.6L (V8-401)	w/ Heavy Duty Cooling w/ A/C	Fan & Alternator	JY013421
SJ, J-Series	1976-81	5.9L (V8-360)	w/ Heavy Duty Cooling w/ A/C	Fan & Alternator	J3227691
SJ, J-Series	1976-79	6.6L (V8-401)	w/ Heavy Duty Cooling w/ A/C	Fan & Alternator	J3227691
CJ-5, 7, 8	1981-83	GM 2.5L (4-151)	w/o A/C	Fan & Alternator	JY013475
CJ-5, 7, 8	1983-86	AMC 2.5L (4-150)	w/o A/C	Fan & Alternator	JY013411

Copyright © 2014 Crown Automotive Sales Co., Inc. All rights reserved.

Upper (Inlet) Radiator Hoses

Model	Year	Engine	Replaces Part #
CJ-5, 6, 7, 8	1972-86	3.8L (6-232) or 4.2L (6-258)	J8136659
CJ-5, 6, C101 Commando	1966-71	V6-225	J0942368
CJ-5, 7, 8	1980-83	GM 2.5L (4-151)	J5360950
CJ-5, 6, 7, 8, SJ, J-Series	1974-91	5.0L (V8-304), 5.9L (V8-360), 6.6L (V8-401)	83505532
SJ, J-Series	1981-86	4.2L (6-258)	J5362698

Lower (Outlet) Radiator Hoses

Model	Year	Engine	Replaces Part #
CJ-5, 6, SJ, J-Series	1965-74	3.8L (6-232) or 4.2L (6-258)	J0940398
CJ-5, 6, 7, 8	1975-86	4.2L (6-258)	J5362162
CJ-5, 7, 8	1980-83	GM 2.5L (4-151)	J5360951
CJ-5, 6, 7, 8, SJ, J-Series, C104 Commando	1974-91	5.0L (V8-304), 5.9L (V8-360), 6.6L (V8-401)	J5354528

Thermostats

Model	Year	Engine	Comments	Replaces Part #
All	1941-71	2.2L (4-134) L or F-Head	170 Degrees	J0812050
All	1941-71	2.2L (4-134) L or F-Head	180 Degrees	905594
All	1954-64	6-226	170 Degrees	J0812050
All	1954-64	6-226	180 Degrees	905594
All	1962-65	6-230	170 Degrees	J0812050
All	1962-65	6-230	180 Degrees	905594
All	1965-86	3.8L (6-232) or 4.2L (6-258)	195 Degrees	83501426
All	1971-91	5.0L (V8-304), 5.9L (V8-360), 6.6L (V8-401)	195 Degrees	83501426

Copyright © 2014 Crown Automotive Sales Co., Inc. All rights reserved.

Thermostat Housings and Gaskets

			Housing	Gasket
Model	Year	Engine	Replaces Part #	Replaces Part #
All	1941-53	2.2L (4-134) L-Head	A1192*	639650
All	1953-71	2.2L (4-134) F-Head	J0800293	J0648852
SJ, J-Series, Pickup	1962-65	6-230	J0800293	J0648852
CJ-5, 6, SJ, J-Series	1966-67	3.8L (6-232)	J3172305	3172314*
CJ-5, 6, SJ, J-Series, C104 Commando	1968-74	3.8L (6-232) or 4.2L (6-258)	J3189718	J3189874
CJ-5, 6, 7, SJ, J-Series	1975-80	3.8L (6-232) or 4.2L (6-258)	J3224216	J3189874
CJ-5, 7, 8, SJ, J-Series	1981-86	4.2L (6-258)	33004856	J3189874
CJ-5, 7, 8	1983-86	AMC 2.5L (4-150)	33004856	J3189874
CJ-5, 6, 7, 8, SJ, J-Series, C104 Commando	1971-91	5.0L (V8-304), 5.9L (V8-360), 6.6L (V8-401)	J3238509	J3187543

* Not Currently Available

Copyright © 2014 Crown Automotive Sales Co., Inc. All rights reserved.

BODY

Exterior Body Items for CJ 4-2

Interior Body Items for CJ 4-4

Weatherstrip & Seals for CJ 4-5

Mirrors for CJ 4-6

Miscellaneous Body Items

SJ, J-Series 4-7

Copyright © 2014 Crown Automotive Sales Co., Inc. All rights reserved.

Exterior Body Items for CJ 1941-1986

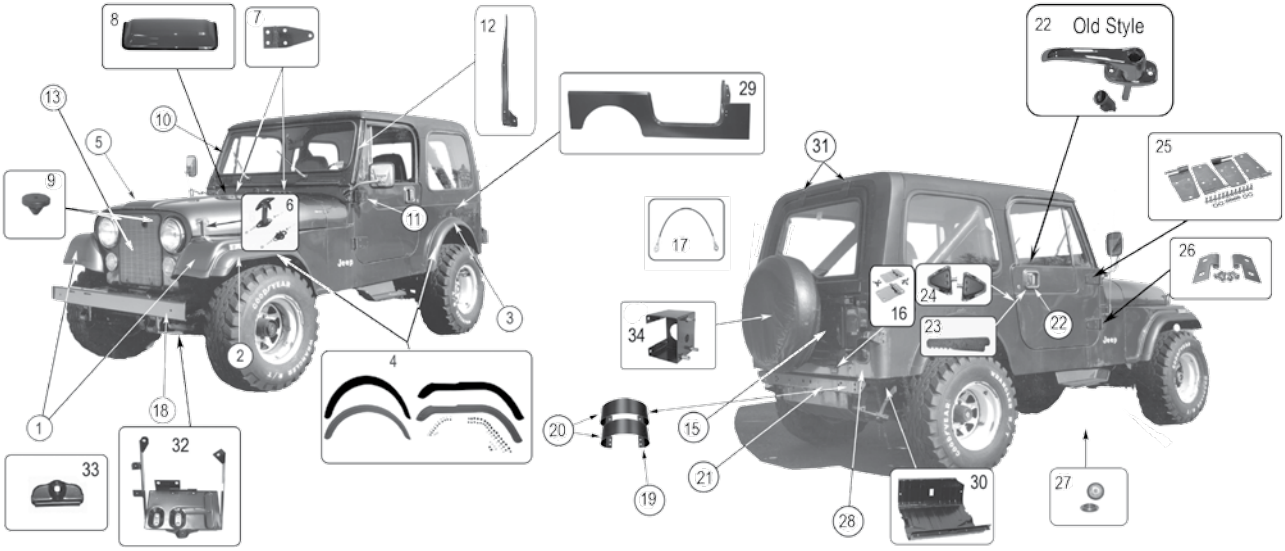

Crown Kits

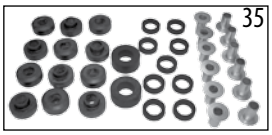

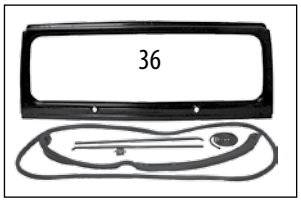

Item #	Description	Position	Years	Comments	Replaces Part #
1	Fender	Right	1969-71	CJ-5, 6 w/ Sidemarker Cutout	984706
		Left	1969-71	CJ-5, 6 w/ Sidemarker Cutout	984705
		Right	1952-68	M38A1, CJ-5, 6 (Sidemarker not original to these vehicles)	984706
		Left	1952-68	M38A1, CJ-5, 6 (Sidemarker not original to these vehicles)	984705
		Right	1972-76	w/ Sidemarker Cutout	J5758964
		Left	1972-76	w/ Sidemarker Cutout	J5758618
2	Fender Flare, Front	Right	1955-86		J5455072
		Left	1955-86		J5455071
3	Fender Flare, Rear	Right	1955-86	Except CJ-8	J5455074
		Left	1955-86	Except CJ-8	J5455073
		Right	1981-86	CJ-8, Modification is Necessary	5AH16JX9
		Left	1981-86	CJ-8, Modification is Necessary	5AH17JX9
4	Fender Flare Kit		1955-86	Except CJ-8, Includes Hardware	J8997109
			1981-86	CJ-8, Includes Hardware, Modifications Necessary	8997109CJ8
5	Hood		1972-86		J5761180
6	Hood Catch	L or R	1941-86	Chrome, (2 Required)	HC1
		L or R	1941-86	Black, (2 Required)	HC2
		L or R	1941-86	Stainless, (2 Required)	HC3
7	Hinge, Hood	L or R	1955-86	Black Primed, (2 Required)	55016588
		L & R	1955-86	Stainless, Set of 2	488402
8	Air Scoop, Hood Vent		1976-86	Smoke Colored	5305
9	Bumper, Hood to Grille	L or R	1972-86	3/16" Thick	5455348
		L or R	81/86	1/4" Thick	J5761372
		L or R	81/86	3/8" Thick	4007504

Copyright © 2014 Crown Automotive Sales Co., Inc. All rights reserved.

Exterior Body Items for CJ

Item #	Description	Position	Years	Comments	Replaces Part #
10	Windshield Frame		1952-69	M38A1, CJ-5, 6 w/ Top Mounted Wipers	973727
			1969-75	CJ-5, 6 w/ Bottom Mounted Wipers	J0987996
			1976-86		J5758971
11	Hinge, Windshield Frame	Right	1976-86	CJ-7, 8	J5462424
		Left	1976-86	CJ-7, 8	J5462425
12	Moulding, Windshield, Side	Right	1976-86	w/ Soft Doors	J5458874
		Left	1976-86	w/ Soft Doors	J5458875
13	Grille, Radiator		1972-86	Not Shown	J5752656
14	Overlay, Grille		1972-86	Stainless Steel	5752247ST
	Kit, Grill Overlay		1972-86	Stainless w/ Chrome Headlamp Bezels	5752247STK
15	Tailgate		1976-86	CJ-7, 8	J5454025
16	Hinges, Tailgate, Lower	L & R	1976-86	Stainless	488419
17	Cable, Tailgate	L or R	1976-86	CJ-7, 8	J5752617
18	Bumper, Front		1955-86	Black	J5355342
19	Bumperette, Rear	L or R	1976-86	Black	J5355457
		L or R	1976-86	Stainless Steel	J5359717ST
20	Bumperette Set, Rear (2)	L & R	1976-86	Black	5355457K
		L & R	1976-86	Stainless Steel	488438
21	Crossmember, Rear		1976-86		J8127711
22	Door Handle, Paddle Style	Right	1981-86	Chrome w/ Full Hard Door	J5758172
		Left	1981-86	Chrome w/ Full Hard Door	J5758173
		Right	1981-86	Black w/ Full Hard Door	55076222
		Left	1981-86	Black w/ Full Hard Door	55076223
	Door Handle, Old Style	L or R	1976-81	Chrome, Includes Lock Cylinder	J8128461
23	Keeper, Door Handle	L or R	1981-86	Paddle Style	55076221
24	Striker, Door	Right	1981-86	CJ-7, 8	55029454K
		Left	1981-86	CJ-7, 8	55029455K
25	Hinges, Door	L & R	1976-86	Stainless, Set of 4 w/ Hardware	488420
26	Brackets, Door Hinge, Lower	L & R	1955-86	Stainless, Set of 2	488407
		L & R	1955-86	Black, Set of 2	488607
27	Body Plug, Floor Pan		1955-86	Black (1")	J4000334
28	Corner Panel	Right	1976-86	CJ-7, 8	J5764220
		Left	1976-86	CJ-7, 8	J5764221
29	Side Panel	Right	1976-86	CJ-7	4798282
		Left	1976-86	CJ-7	4798283
30	Skid Plate, Fuel Tank		1976-86	w/ 15 Gallon Tank	J5357023
31	Hinge, Liftgate	L or R	1977-86	CJ-7, Black w/ Hard Top	J8128520
32	Battery Tray		1976-86	Black	J5764665
			1976-86	Stainless	5764665ST
34	Bracket, Spare Tire		1945-83	Side Mounted	J5461361
Crown Kits					
35	Mounting Kit, Body		1979-86	Steel Bodies Only	5462446K
36	Windshield Frame Kit		1976-86	Includes Frame, Seals, Weatherstrip Channels & Screws	5758971K
37	Hinge Kit, Windshield Frame	L & R	1976-86	Stainless	488403
		L & R	1976-86	Black	546242425K

RT OFF-ROAD Indicates a ***RT Off-Road*** Upgrade Item

Copyright © 2014 Crown Automotive Sales Co., Inc. All rights reserved.

Interior Body Items for CJ- 1941-1986

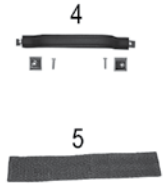

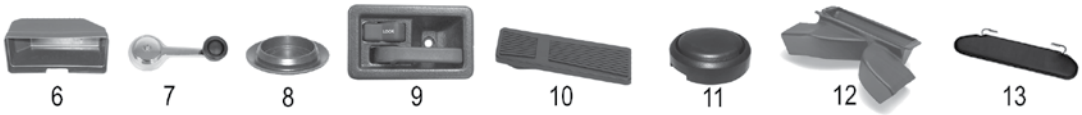

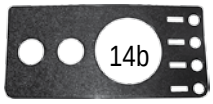

15
Crown Kits

Item #	Description	Position	Years	Comments	Replaces Part #
1	Seat Belt, Rear		1976-86	60" Non-Retractable	BELT1B
2	Seat Belt, Front		1976-81	2 Point, Retractable	BELT2B
3	Seat Belt, Front		1982-86	w/ shoulder strap, 3 Point, Retractable	BELT3B
4	Handle, Inside Door Pull		1976-86 1976-86	Black (Cinder) Spice	55009801K 55009801KS
5	Strap, Door Stop		1976-86		J5459207
6	Box, Inner Glove Compartment		1972-86	Plastic	J5752279
7	Handle, Window Crank	L or R L or R	1976-86 1976-86	CJ-5, 7, 8 - w/o Door Speaker CJ-7, 8 w/ Door Speaker	J3678907 J3726992
8	Body Plug, Floor Pan		1955-86	Black (1")	J4000334
9	Handle, Door	Right Left	1982-86 1982-86	CJ-7, 8 CJ-7, 8	55176476AB 55176477AB
10	Pad, Pedal	Accelerator Brake or Clutch	1971-86 1957-86	 w/ Manual Transmission	53003932AB J5363508
11	Horn Button		1976-86	Black	3238073
12	Duct, Floor		1974-86		55035618
13	Sun Visor Set	L & R	1955-85	Black Gray Spice	RT54001 RT54002 RT54003
14a 14b 14c	Dash Overlay		1976-86 1976-86 1976-86	Black Plastic, w/ Radio Opening Black Plastic, w/ out Radio Opening Stainless, w/ Radio Opening	J5457117 5457117NR 488412
Crown Kits					
15	Window Regulator Kit Includes Regulator, Black Plastic Handle and Screw	Right Left	1976-86 1976-86	CJ-7, 8 w/ Full Steel Doors CJ-7, 8 w/ Full Steel Doors	55074990K 55074991K

RT OFF-ROAD Indicates a ***RT Off-Road*** Upgrade Item

Copyright © 2014 Crown Automotive Sales Co., Inc. All rights reserved.

Weatherstrip & Seals

MB,. M38, CJ-2A, CJ-3A, CJ-3B, CJ-4, CJ-5, CJ-6, CJ-7, CJ-8

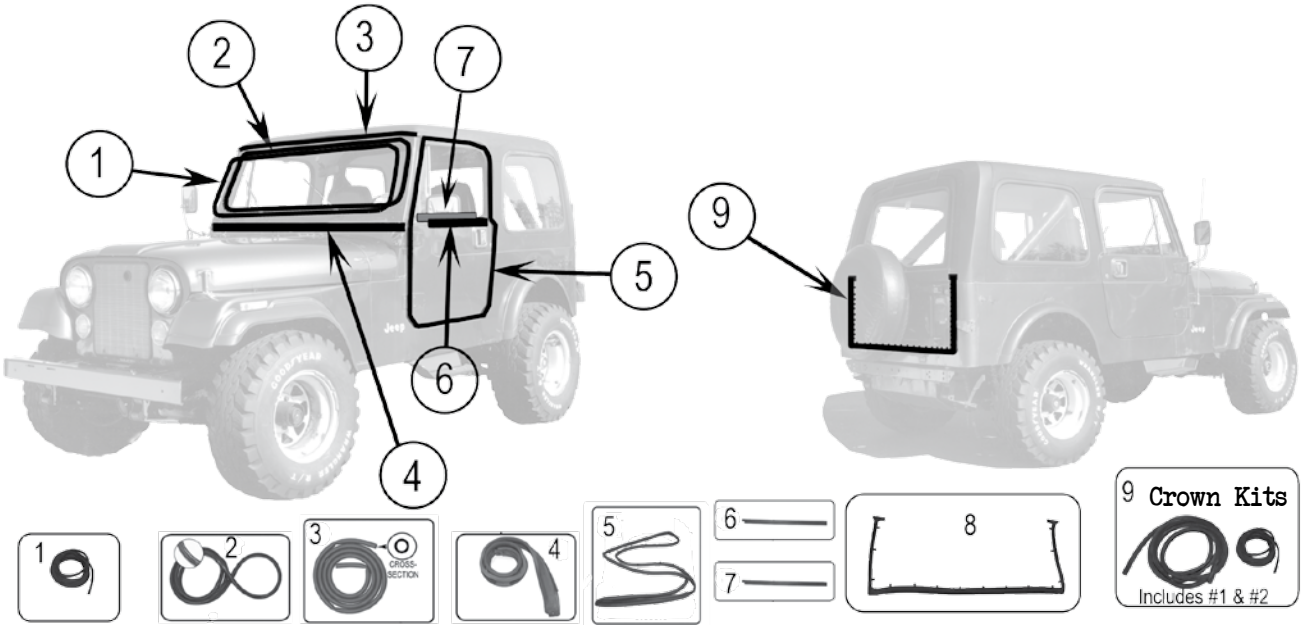

Item #	Description	Model	Comment	Replaces Part #
1	Weatherstrip, Windshield Channel	1951-75 M38, CJ-3A, 3B, 5, 6	Locks Windshield to Frame	J0978986
2	Weatherstrip, Windshield Glass (Outer)	MB, CJ-2A 1945-75 M38, CJ-3A, 3B, 5, 6 1976-86 CJ-5, 7, 8	Seals Windshield to Frame	A2250 J0978995 J5453949
3	Weatherstrip, Windshield Frame to Top	1976-86 CJ-5, 7, 8	w/ Hardtop	55052607
4	Weatherstrip, Cowl to Windshield Frame	MB, CJ-2A M38, CJ-3A, 3B 1955-75 CJ-5, 6 1976-86 CJ-5, 7, 8		J0671045 674234 J0989844 J5453950
5	Weatherstrip, Door	1976-86 CJ-5, 7, 8 1976-86 CJ-5, 7, 8	Right, w/ Full Steel Door Left, w/ Full Steel Door	55176222 55176223
6	Weatherstrip, Door Glass, Outer	1976-86 CJ-5, 7, 8 1976-86 CJ-5, 7, 8	Right Left	55024254 55024255
7	Weatherstrip, Door Glass, Inner	1982-86 CJ-7, 8 1982-86 CJ-7, 8	Right, w/ Movable Vent Glass Left, w/ Movable Vent Glass	J5762384 J5762385
8	Weatherstrip, Tailgate	1976-86 CJ-7, 8	Includes Clips	J5457112
Crown Kits				
9	Weatherstrip Kit	1948-75 M38, CJ-3A, 3B, 5, 6	Includes , Inner and Outer Windshield Weatherstrips	978995K

Copyright © 2014 Crown Automotive Sales Co., Inc. All rights reserved.

Mirrors

CJ-5, CJ-6, CJ-7, CJ-8

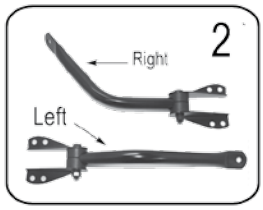

Crown Kits

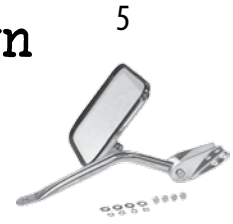

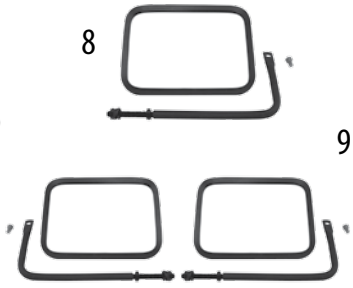

Item #	Description	Years	Position	Comments	Replaces Part #
1	Side Mirror Only	1955-86	L or R	Black	J5462736
		1955-86	L or R	Stainless	5751193ST
2	Arm, Mirror Support	1955-86	Left	Black	J5455301
		1955-86	Right	Black	J5455302
		1955-86	Left	Chrome	J5751194
		1955-86	Right	Chrome	J5751195
		1955-86	Left	Stainless	5751194ST
		1955-86	Right	Stainless	5751195ST
3	Rearview Mirror	1955-86		9.75" Wide	J8993023
		1955-86		8.5" Wide	J5965338
4	Support Kit, Rearview Mirror	1955-86		Includes Adhesive & Mount	J3657374
Crown Kits					
5	Side Mirror and Arm Kit	1955-86	Left	Black	5455301K
		1955-86	Right	Black	5455302K
		1955-86	Left	Stainless	5751194STK
		1955-86	Right	Stainless	5751195STK
		1955-86	Left	Chrome	5751194K
		1955-86	Right	Chrome	5751195K
6	Side Mirror, Complete Set	1955-86	L & R	Stainless, Mounts to Front Lower Windshield Hinge	5751193STK
		1955-86	L & R	Black, Mounts to Front Lower Windshield Hinge	5462736K
7	Rear View Mirror & Mount Kit	1955-86	Incl. Mirror, Mount & Adhesive, 9.75" Mirror		8993023K
		1955-86	Incl. Mirror, Mount & Adhesive, 8.5" Mirror		5965338K
8	Safari Mirror w/ Arm	1976-86	L or R, Includes Hardware, Mounts Directly to Door Hinge for Use with Doors Off		SDM100
9	Safari Mirror Set	1976-76	L & R, Includes Hardware, Mounts Directly to Door Hinge for use with Doors Off		SMD100K

RT OFF-ROAD Indicates a ***RT Off-Road*** Upgrade Item

Copyright © 2014 Crown Automotive Sales Co., Inc. All rights reserved.

Miscellaneous Body Items

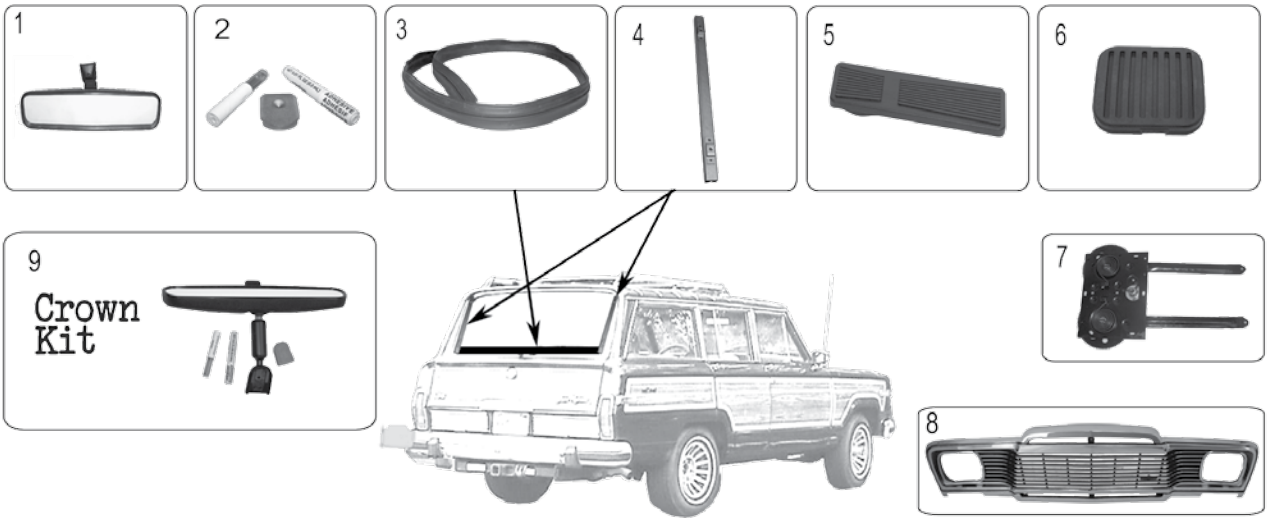

Item #	Description	Years	Model	Position	Comments	Replaces Part #
1	Mirror, Rearview	1975-91	SJ, J-Series	Center	9.75"Wide	J8993023
2	Mount Kit	1975-91	SJ, J-Series		Includes Button & Adhesive	J3657374
3	Weatherstrip, Rear Window	1974-78 1979-91	SJ SJ	Bottom Bottom	15/64"Thick Glass (Fits into 8130454 Channel) 5/32"Thick Glass	J5455398 J5469605
4	Window Guide, Side Channel	1981-91	SJ	L or R	2 Required	J5465084
5	Pad, Accelerator	1971-91	SJ, J-Series			53003932AB
6	Pad, Brake or Clutch	1965-86	SJ, J-Series		w/ Manual Transmission	J5363508
7	Window Regulator, Tailgate	1981-91	SJ		Manual	J0974016
8	Grille	1979-85 1979-80	SJ J-Series		Chome Chrome	J5465070 J5465070
Crown Kits						
9	Rearview Mirror Kit	1975-91	Includes Mirror, Button & Adhesive			8993023K

Copyright © 2014 Crown Automotive Sales Co., Inc. All rights reserved.

Notes:

Copyright © 2014 Crown Automotive Sales Co., Inc. All rights reserved.

ELECTRICAL & LAMPS

(Including Retaining Rings/Bezels and Speedometer Cables)

Spark Plugs 5-2
Alternators 5-2
Voltage Regulators 5-2
Engine Drive Belts 5-3
Distributors 5-3
Distributor Caps 5-4
Points Sets 5-4
Distributor Rotors 5-5
Condensers 5-5
Points & Condenser Sets 5-5
Distributor Sensor Assemblies 5-5
Vacuum Chambers 5-6
Distributor Vacuum Control 5-6
Distributor Gears 5-6
Ignition Modules 5-6
Ignition Coils 5-6
Ignition Coil Ballast Resistors 5-7
Ignition Wire Sets 5-7
Ignition Switches 5-7
Ignition Cylinders 5-7
Starter Solenoids 5-8
Starter Drives 5-8
Starter Coils 5-8
Headlight Switches 5-8
Headlight Dimmer Switches 5-9
Directional Switches 5-9
Directional & Hazard Flashers 5-9
Generator Parts 5-9
Horn Button Kits 5-10
Horns 5-10
Horn Relays 5-10
Backup Light Switches 5-10
Stop Light Switches 5-11
Headlamps 5-11
Headlamp Retaining Rings 5-11
Headlamp Bezels 5-11
Front Parking & Directional Lamps 5-12
Front Parking Lenses 5-12
Tail Lamp Assemblies 5-12
Tail Lamp Lenses 5-12
Front & Rear Side Marker Lamps 5-13
Speedometer Assemblies 5-13
Tachometers 5-13
Voltmeters 5-13
Oil Pressure Gauges 5-14
Temperature Gauges 5-14
Oil Pressure Sending Units 5-14
Coolant Temperature Sensors 5-15
Fuel Sending Units 5-15
Speedometer Cables 5-15

Copyright © 2014 Crown Automotive Sales Co., Inc. All rights reserved.

Spark Plugs

Model	Year	Engine	Comments	Replaces Part #
MB, CJ-2A, 3A, 3B, 5, 6	1941-71	2.2L (4-134) L or F-Head		4339491
M38, M38A1	1950-63	2.2L (4-134) L or F-Head	w/ Waterproof Distributor; Stamped 2243	922727
CJ-5, 6, 7, SJ, J-Series	1971-77	4.2L (6-258)		J3189066
CJ-5, 6, SJ, J-Series	1978-80	4.2L (6-258)		4318137
CJ-5, 7, 8, SJ, J-Series	1981-86	4.2L (6-258)		4318138
CJ-5, 6, 7, 8, C104 Commando	1971-81	5.0L (V8-304)		J3189066
SJ, J-Series	1971-88	5.9L (V8-360)		J3189066
SJ, J-Series	1989-91	5.9L (V8-360)		5213693
CJ-5, 7, 8	1983-86	AMC 2.5L (4-150)		4318138
Station Wagon	1950-55	2.6L (6-161)		4339491
Pickup, FC-170, Station Wagon	1954-64	3.7L (6-226)		4339491

Alternators

Model	Year	Engine	Replaces Part #
CJ-5, 7, 8, SJ, J-Series	1975-86	4.2L (6-258)	J8134663
CJ-5, 6, 7, 8	1975-81	5.0L (V8-304)	J8134663
SJ, J-Series	1975-91	5.9l (V8-360)	J8134663
CJ-5, 7, 8	1980-83	GM 2.5L (4-151)	J8134663
CJ-5, 7, 8	1983-86	AMC 2.5L (4-150)	J8134663
106 amp; Replaces 56, 63, 77, 70, 78, 85 amp Alternators			

Voltage Regulators

Model	Year	Engine	Comments	Replaces Part #
All Except M38 and M38A1	1945-56	All	6-Volt	J0923131
All Except M38 and M38A1	1957-66	All	12-Volt	J0923130
CJ-5, 7, 8, SJ, J-Series	1980-86	4.2L (6-258)		J8125176
CJ-5, 7, 8	1980-81	5.0L (V8-304)		J8125176
SJ, J-Series	1980-91	5.9L (V8-360)		J8125176
CJ-5, 7, 8	1980-83	GM 2.5L (4-151)		J8125176
CJ-5, 7, 8	1983-86	AMC 2.5L (4-150)		J8125176

Copyright © 2014 Crown Automotive Sales Co., Inc. All rights reserved.

Engine Drive Belts

Model	Year	Engine	Comments	Function	Replaces Part #
M38, M38A1	1950-63	2.2L (4-134) L or F-Head	Includes 2 Belts	Fan, Generator	118866
ALL except M38, M38A1	1941-71	2.2L (4-134) L or F-Head		Fan, Generator	J0946707
CJ-5, 6, C104 Commando	1971-73	3.8L (6-232), 4.2L (6-258)		Fan, Alternator	JY013361
CJ-5, 6, C104 Commando	1974	3.8L (6-232), 4.2L (6-258)		Fan, Alternator	J3229607
CJ-5, 6, 7	1975-76	3.8L (6-232), 4.2L (6-258)		Fan, Alternator	JY013411
CJ-5, 7, 8	1977-86	4.2L (6-258)	w/o A/C	Fan, Alternator	JY013411
CJ-5, 7, 8	1981-86	4.2L (6-258)	w/ Factory Installed A/C; to Crank Pulley	Fan, Alternator	JY013411
SJ, J-Series	1981-86	4.2L (6-258)	w/o Factory Installed A/C	Fan, Alternator	JY013411
CJ-5, 6, C104 Commando	1971-75	5.0L (V8-304)		Fan, Alternator	JY013411
CJ-5, 7, 8	1977-81	5.0L (V8-304)	w/o A/C	Fan, Alternator	J3227691
CJ-5, 7, 8	1977-81	5.0L (V8-304)	w/ A/C	Fan, Alternator	JY013421
SJ, J-Series	1970-73	5.9L (V8-360), 6.6L (V8-401)		Fan, Alternator	JY013411
SJ, J-Series	1974-75	5.9L (V8-360), 6.6L (V8-401)	w/o Heavy Duty Cooling	Fan, Alternator	JY013411
SJ, J-Series	1976-81	5.9L (V8-360)	w/ Heavy Duty Cooling w/ A/C	Fan, Alternator	JY013421
SJ, J-Series	1976-79	6.6L (V8-401)	w/ Heavy Duty Cooling w/ A/C	Fan, Alternator	JY013421
SJ, J-Series	1976-81	5.9L (V8-360)	w/ Heavy Duty Cooling w/ A/C	Fan, Alternator	J3227691
SJ, J-Series	1976-79	6.6L (V8-401)	w/ Heavy Duty Cooling w/ A/C	Fan, Alternator	J3227691
CJ-5, 7, 8	1981-83	GM 2.5L (4-151)	w/o A/C	Fan, Alternator	JY013475
CJ-5, 7, 8	1983-86	AMC 2.5L (4-150)	w/o A/C	Fan, Alternator	JY013411

Distributors

Model	Year	Engine	Type	Comments	Replaces Part #
All Except M38 and M38A1	1941-71	2.2L (4-134) L or F-Head	Prestolite	Replacement Rotor: 923392	923068
MB, CJ-2A, 3A, 3B, 5, 6, C101	1941-71	2.2L (4-134) L or F-Head		Electronic Pickup, Must Be 12 Volt System	923068E
CJ-5, 7, 8, SJ, J-Series	1978-86	4.2L (6-258)	Motorcraft	Does not include cap or rotor	83506286

Copyright © 2014 Crown Automotive Sales Co., Inc. All rights reserved.

Distributor Caps

Model	Year	Engine	Type	Comments	Replaces Part #
CJ-2A, 3A, 3B, 5, 6	1945-71	2.2L (4-134) L or F-Head	Prestolite	w/ Distributor Tag #: IAD-4041; Spring-Loaded Carbon Button	JA009307
CJ-3A, 3B, 5, 6, C101 Commando, FC-150, Pickup	1953-71	2.2L (4-134) F-Head	Prestolite	w/ Distributor Tag #: IAT-4401, IAY-4012, IAY-4401A, IAY-4401B, IAT-4204A, IAT-4405	J0118343
CJ-5, 6, C101 Commando, SJ, J-Series	1971-74	4.2L (6-258)	Delco		J4488091
CJ-5, 6, 7, SJ, J-Series	1975-77	4.2L (6-258)	Motorcraft		J8126711
CJ-5, 7, 8, SJ, J-Series	1978-86	4.2L (6-258)	Motorcraft		J3230457
CJ-5, 6, C101 Commando	1971-74	5.0L (V8-304)	Delco		J3200192
CJ-5, 6, 7, SJ, J-Series	1975-77	5.0L (V8-304), 5.9L (V8-360), 6.6L (V8-401)	Prestolite		J8125448
CJ-5, 7, 8, SJ, J-Series	1978-91	5.0L (V8-304), 5.9L (V8-360), 6.6L (V8-401)	Motorcraft		J3230757
FC-170, Pickup	1954-64	3.7L (6-226)	Prestolite	w/ Distributor Tag #: IAT-4206, IAT-4206B, IAT-4404, IAT-4404A	J0931674
SJ, J-Series	1965-79	3.8L (6-232)	Delco		J4488091
SJ, J-Series	1970-74	5.9L (V8-360), 6.6L (V8-401)	Delco		J3200192
SJ, J-Series	1965-67	5.4L (V8-327)	Delco		J3200192
SJ, J-Series	1968-70	5.7L (V8-350)	Delco		J3200192
SJ, J-Series	1962-65	3.8L (6-230)	Prestolite		J0931674
SJ, J-Series, Pickup	1962-65	3.8L (6-230)	Prestolite	w/ Distributor Tag #: IAT-4411, IAT-4416	J0931674
CJ-5, 7, 8	1983-86	AMC 2.5L (4-150)			J3234451

Points Sets

Model	Year	Engine	Type	Comments	Replaces Part #
All Except M38 and M38A1	1941-71	2.2L (4-134) L or F-Head	Prestolite	w/ Distributor Tag #: IAD-4041, IAT-4401, IAY-4012, IAT-4401A, IAY-4401B	J0923146
FC-150, Pickup	1956-64	2.2L (4-134) F-Head	Prestolite	w/ Distributor Tag #: IAT-4405	J3209294
CJ-5, 6, C101 Commando, C104 Commando	1966-73	3.7 (V6-225)	Delco		J3200197
Pickup	1954-62	3.7L (6-226)	Prestolite	w/ Distributor Tag #: IAT-4206, IAT-4206B	J0923146
Pickup	1954-62	3.7L (6-226)	Prestolite	w/ Distributor Tag #: IAT-4404, IAT-4404A	J3209294
CJ-5, 6, SJ, J-Series	1965-74	3.8L (6-232)	Delco		J3204202
CJ-5, 6, SJ, J-Series	1971-74	4.2L (6-258)	Delco		J3204202
CJ-5, 6, C104 Commando	1971-74	5.0L (V8-304)	Delco		J3200197
SJ, J-Series	1965-67	5.4L (V8-327)	Delco		J3200197
SJ	1963-65	3.8L (6-230)	Prestolite	w/ Distributor Tag #: , IAT-4411, IAT-4416	J3209294
SJ, J-Series	1968-70	5.7L (V8-350)	Delco		J3200197
SJ, J-Series	1970-74	5.9L (V8-360)	Delco		J3200197

Copyright © 2014 Crown Automotive Sales Co., Inc. All rights reserved.

Distributor Rotors

Model	Year	Engine	Type	Comments	Replaces Part #
MB	1941-45	2.2L (4-134) L-Head	Prestolite		A5294
CJ-2A, 3A, 3B, 5, 6	1945-71	2.2L (4-134) L or F-Head	Prestolite	w/ Distributor Tag #: IAD-4041	JA001658
CJ-3B, 5, 6, C101 Commando	1960-71	2.2L (4-134) L or F-Head	Prestolite	w/ Distributor Tag #: IAT-4401	J0923392
FC-150, Pickup	1950-64	2.2L (4-134) L or F-Head	Prestolite	w/ Distributor Tag #: IAT-4204A, IAT-4405	J0923392
CJ-5, 6, SJ, J-Series, C104 Commando	1965-74	3.8L (6-232), 4.2L (6-258)	Delco		J4488087
CJ-5, 6, 7, SJ, J-Series	1975-77	3.8L (6-232), 4.2L (6-258)	Motorcraft		J8136633
CJ-5, 7, 8, SJ, J-Series	1978-86	4.2L (6-258)	Motorcraft		J3230821
CJ-5, 6, C104 Commando	1971-74	5.0L (V8-304)	Delco		J8122343
CJ-5, 6, 7	1975-77	5.0L (V8-304)	Motorcraft		J8126321
CJ-5, 7, 8	1978-81	5.0L (V8-304)	Motorcraft		J3230765
SJ, J-Series	1970-74	5.9L (V8-360), 6.6L (V8-401)	Delco		J8122343
SJ, J-Series	1975-77	5.9L (V8-360), 6.6L (V8-401)	Prestolite		J8126321
SJ, J-Series	1978-91	5.9L (V8-360), 6.6L (V8-401)	Motorcraft		J3230765
SJ, J-Series	1965-67	5.4L (V8-327)	Delco		J8122343
FC-170, Pickup	1954-64	3.7L (6-226)	Prestolite		J0120125
Pickup, SJ, J-Series	1962-65	3.8L (6-230)	Prestolite		J0120125
SJ, J-Series	1968-71	5.7L (V8-350)	Delco		J8122343
CJ-5, 7, 8	1983-86	AMC 2.5L (4-150)			33004795

Condensers

Model	Year	Engine	Replaces Part #
All	1941-71	2.2L (4-134) L or F-Head	J3204585
FC-170, Pickup, Station Wagon	1957-64	6-226	J3204585
Pickup, SJ, J-Series, Station Wagon	1962-65	6-230	J3204585

Points and Condenser Sets

Model	Year	Engine	Replaces Part #
CJ-5, 6, SJ, J-Series	1966-74	3.8L (6-232), 4.2L (6-258)	4488760

Distributor Sensor Assemblies

Model	Year	Engine	Replaces Part #
CJ-5, 7, 8, SJ, Geezers	1977-86	4.2L (6-258)	J8128445
SJ, J-Series	1981-91	5.9L (V8-360)	J8128900

Copyright © 2014 Crown Automotive Sales Co., Inc. All rights reserved.

Vacuum Chambers

Model	Year	Engine	Replaces Part #
CJ-5, 6, 7, SJ, J-Series	1975-77	3.8L (6-232), 4.2L (6-258)	J8128408

Distributor Vacuum Control

Model	Year	Engine	Replaces Part #
CJ-5, 6, SJ, J-Series, C104	1973-74	3.8L (6-232), 4.2L (6-258)	J8122350

Distributor Gears

Model	Year	Engine	Replaces Part #
CJ-5, 7, 8, SJ, J-Series	1978-86	4.2L (6-258)	J8133652
CJ-5, 6, 7, 8, SJ, J-Series	1971-91	5.0L (V8-304), 5.9L (V8-360), 6.6L (V8-401)	J3208615
CJ-5, 7, 8	1983-86	AMC 2.5L (4-150)	J8133652

Ignition Modules

Model	Year	Engine	Replaces Part #
CJ-5, 6, 7	1975-77	3.8L (6-232), 4.2L (6-258), 5.0L (V8-304)	J3224964
CJ-5, 7, 8, SJ, J-Series	1978-86	4.2L (6-258)	33004065
SJ, J-Series	1978-87	5.9L (V8-360)	33004065
SJ, J-Series	1988-91	5.9L (V8-360)	53005079
CJ-5, 7, 8	1983-86	AMC 2.5L (4-150)	33004065

Ignition Coils

Model	Year	Engine	Comments	Replaces Part #
MB, CJ-2A, 3A, 3B, 5, 6, FC-150, FC-170, Pickup, VJ Jeepster, Sedan Delivery, Station Wagon	1941-58	All	w/ 6-Volt Electrical System	J0649712
CJ-3B, 5, 6, C101 Commando, Pickup	1957-71	2.2L (4-134)	w/ 12-Volt Electrical System	J8125028
CJ-5, 6, 7, SJ, J-Series, C104 Commando	1966-77	3.8L (6-232), 4.2L (6-258)		J8125028
CJ-5, 7, 8, SJ, J-Series	1978-86	3.8L (6-232), 4.2L (6-258)		33004522
CJ-5, 6, 7, SJ, J-Series, C104 Commando	1971-77	5.0L (V8-304), 5.9L (V8-360), 6.6L (V8-401)		J8125028
CJ-5, 7, 8, SJ, J-Series	1978-91	5.0L (V8-304), 5.9L (V8-360), 6.6L (V8-401)		33004522
CJ-5, 7, 8	1983-86	AMC 2.5L (4-150)		33004522

Copyright © 2014 Crown Automotive Sales Co., Inc. All rights reserved.

Ignition Coil Ballast Resistors

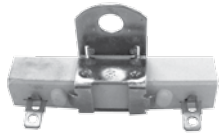

Model	Year	Engine	Comments	Replaces Part #
CJ-5, 6, C101 Commando, C104 Commando	1966-73	3.7L (V6-225)		J8121789
SJ, J-Series, Pickup	1962-65	3.8L (6-230)		J8121789

Ignition Wire Sets

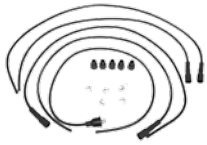

Model	Year	Engine	Replaces Part #
CJ-3B, 5, 6, FC-150, C101 Commando, VJ Jeepster, Pickup, Station Wagon	1950-71	2.2L (F4-134)	J0930456
All	1966-86	3.8L (6-232), 4.2L (6-258)	83300088
CJ-5, 6, 7, 8, C104 Commando, SJ, J-Series	1971-91	5.0L (V8-304), 5.9L (V8-360), 6.6L (V8-401)	83300090
CJ-5, 7, 8	1983-86	AMC 2.5L (4-150)	83502400

Ignition Switches, Cylinder Type

Model	Year	Comments	Replaces Part #
CJ-3B, 5, 6	1953-66	w/ Threaded Studs; Includes 2 Keys	J0924918
CJ-5, 6	1965-74	w/ 11 Spade Terminals; Includes 2 Keys	J0947399
CJ-5, 6	1974-75	Dash Mounted w/ 10 Spade Terminals; Includes 2 Keys	J5454951
FC-150, FC-170, Pickup, Sedan Delivery, Station Wagon	1946-64	Includes 2 keys	J0924918
SJ, J-Series	1962-72	Dash Mounted w/ 10 Spade Terminals; Includes 2 Keys	J5454951

Ignition Switches, Inside Column

Model	Year	Comments	Replaces Part #
CJ-5, 7, 8	1976-86	w/o Tilt Wheel	J8128889
CJ-5, 7, 8	1974-86	Column Mounted w/ Tilt Wheel	J3250575
SJ, J-Series	1977-86	w/o Tilt Wheel	J8128889
SJ, J-Series	1977-91	w/ Tilt Wheel	J3250575

Ignition Cylinders

Model	Year	Comments	Replaces Part #
CJ-5, 7, 8	1976-84	Uncoded	J8120081
SJ, J-Series	1981-84	Uncoded	J8120081

Copyright © 2014 Crown Automotive Sales Co., Inc. All rights reserved.

Starter Solenoids

Model	Year	Engine	Comments	Replaces Part #
CJ-3B, 5, 6, FC-150, C101 Commando	1953-71	2.2L (F4-134)	12-Volts	J0919294
CJ-5, 7, 8, SJ, J-Series	1971-86	3.8L (6-232) or 4.2L (6-258)	w/ Manual Transmission	J3235898
CJ-5, 7, 8	1981-86	4.2L (6-258)	w/ Automatic Transmission	J5752125
SJ, J-Series	1981-91	ALL	w/ Automatic Transmission	J5752125
SJ, J-Series	1971-86	5.9L (V8-360), or 6.6L (V8-401)	w/ Manual Transmission	J3235898
CJ-5, 7, 8	1980-83	GM 2.5L (4-151)		J8130938

Starter Drives

Model	Year	Comments	Replaces Part #
MB, CJ-2A	All	w/ Autolite MZ-4113 Starter; 10 Teeth	A17702
CJ-3B, 5, 6, FC-150, Pickup, Sedan Delivery, Station Wagon	1957-71	w/ Starters: MCH-6203, MCH-6207, MCH-6215, MDM-6005, MDM-6006; 9 Teeth	119597
CJ-3B, 5, 6, FC-170, C101 Commando, Pickup, Sedan Delivery, Station Wagon	1953-71	w/ Starters: MDU-7003, MDU-7003A, MDU-7004	931463
SJ, J-Series	1965-70	w/ 5.4L (V8-327 or 3.8L (6-323) Engines	J0938918

Starter Coils

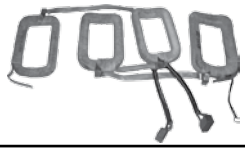

Model	Year	Comments	Replaces Part #
CJ-5, 6, SJ, J-Series	1966-71	w/ 3.8L (6-232), 4.2L (6-258) Engines	J8120997
CJ-5, 6, 7, 8, SJ, J-Series	1972-86	w/ 4.2L (6-258), 5.0L (V8-304), 5.9L (V8-590) Engines	J8128438

Headlight Switches

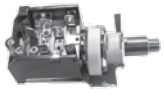

Model	Year	Comments	Replaces Part #
CJ-2A, 3A, 3B, 5, 6	1945-71	Includes knob and circuit breaker	J0946613
CJ-5, 6, 7, SJ, J-Series	1973-79	Does not include knob	J5450558
CJ-5, 7, 8, SJ, J-Series	1979-86	w/ Switch Stamped "5751098"; Does not include knob	J5751098

Copyright © 2014 Crown Automotive Sales Co., Inc. All rights reserved.

Headlight Dimmer Switches

Model	Year	Comments	Replaces Part #
CJ-2A, 3A, 3B, 5, 6	1945-71	Mounts to floor	J0811681
CJ-5, 6, 7, 8, SJ, J-Series	1974-86	Mounts to floor	J5461816

Directional Switches

Model	Year	Replaces Part #
CJ-5, 7	1976	J8127756
SJ, J-Series	1973-76	J8127756
CJ-5, 7, 8, SJ, J-Series	1977-91	56002011

Directional & Hazard Flashers

Model	Year	Replaces Part #
CJ-5, 7, 8, SJ, J-Series	1981-90	J5452266

Generator Parts

Description	Model	Year	Engine	Replaces Part #
Generator Support Bolt	MB, CJ-2A, 3A, 3B, 5, 6, FC-150, FC-170, C101 Commando, VJ Jeepster, Station Wagon	1941-71	2.2L (4-134) L or F-Head	A1397
Generator Support Bushing	MB, CJ-2A, 3A, 3B, 5, 6, FC-150, FC-170, C101 Commando, VJ Jeepster, Station Wagon	1941-71	2.2L (4-134) L or F-Head	JA001395

Copyright © 2014 Crown Automotive Sales Co., Inc. All rights reserved.

Horn Button Kits

Model	Year	Comments	Replaces Part #
CJ-2A, 3A, 3B, 5, 6	1946-66	1-1/4" Horn	802359K
CJ-3B, 5, 6	1963-71	2-1/4" Horn	927416K

Horns

Model	Year	Comments	Replaces Part #
CJ-5, 7, 8	1976-86	High Pitch	56002378
CJ-5, 7, 8	1976-86	Low Pitch	83502833
SJ, J-Series	1981-91	High Pitch	56002378
SJ, J-Series	1981-91	Low Pitch	83502833

Horn Relays

Model	Year	Replaces Part #
CJ-5, 6, C104 Commando, SJ, J-Series	1972-74	J3242520
CJ-5, 6, 7, 8	1975-86	J5456647
SJ, J-Series	1976-91	J5456647

Backup Light Switches

Model	Year	Transmission / Transfer Case	Comments	Replaces Part #
CJ-5, 6, C101 Commando	1966-73	All	On Transmission	J8130829
CJ-5, 7, 8, SJ, J-Series	1976-86	w/ T18 Transmission		J5350061
CJ-5, 7, 8, SJ, J-Series	1980-86	w/ T176, T177 Transmission		J5751207
CJ-5, 7, 8	1982-86	w/ T4, T5, SR-4 Transmission		J8134068
SJ, J-Series	1974-75	w/ Automatic Transmisison		J5350284
SJ, J-Series	1980-88	w/ NP208 Transfer Case		J8130829
SJ, J-Series	1986	w/ T5 Transmission		J8134068

Copyright © 2014 Crown Automotive Sales Co., Inc. All rights reserved.

Stop Light Switches

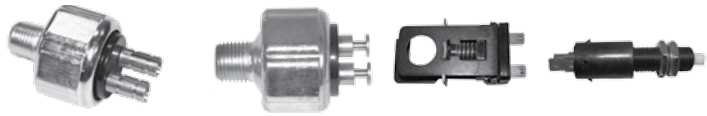

Model	Year	Engine	Comments	Replaces Part #
MB, CJ-2A, 3A, 3B, 5, 6, Pickup, FC-150, FC-170, VJ Jeepster, Sedan Delivery, Station Wagon	1941-65	All	w/ Bullet Terminals; Mounts to Master Cylinder	J0647801
CJ-5, 6	1966	3.7L (V6-225)	w/ Single-Reservoir Master Cylinder; w/ Bullet Terminals; Mounts to Master Cylinder	J0647801
CJ-5, 6, C101 Commando, C104 Commando	1966-72	All	w/ Nail Head Terminals; Mounts to Master Cylinder	J0931216
CJ-5, 6, C104 Commando	1972-75	All	Mounts to brake pedal	J3215939
CJ-5, 7, 8	1976-86	All	Mounts to brake pedal	J5352620
SJ, J-Series	1974-91	All	Mounts to brake pedal	J5352620

Headlamps

Model	Year	Comments	Replaces Part #
CJ-5, 6, 7, 8	1965-86	Sealed Beam, Round (6014)	J8124687
SJ, J-Series	1979-91	Sealed Beam, Rectangular (6052)	J8128683

Headlamp Retaining Rings

Model	Year	Replaces Part #
CJ-2A, 3A, 3B, 5, 6, 7, 8, FC-150, FC-170, C101 Commando, C104 Commando, Pickup, VJ Jeepster, Sedan Delivery, Station Wagon	1945-86	J8128749

Headlamp Bezels

Model	Year	Comments	Position	Replaces Part #
CJ-3B, 5, 6, FC-150, FC-170, Pickup, Sedan Delivery, Station Wagon	1948-71	Chrome	Left or Right	J0649518
CJ-5, 6, 7, 8	1972-86	Chrome	Left or Right	J5460087

Copyright © 2014 Crown Automotive Sales Co., Inc. All rights reserved.

Front Parking & Directional Lamps

Model	Year	Comments	Position	Replaces Part #
CJ-5, 6	1969-75	Lens Mounted w/ 3 Screws	Left or Right	J0989852
CJ-5, 7, 8	1976-86	Lens Mounted w/ 2 Screws	Left or Right	J5752771
SJ, J-Series	1976-91		Left	J5460107
SJ, J-Series	1976-91		Right	J5460106

Front Parking Lenses

Model	Year	Comments	Position	Replaces Part #
CJ-5, 6	1969-75	Lens Mounted w/ 3 Screws	Left or Right	J0991402
CJ-5, 7, 8	1976-86	Lens Mounted w/ 2 Screws	Left or Right	J8127449

Tail Lamp Assemblies

Model	Year	Comments	Position	Replaces Part #
CJ-5, 7	1976-80	w/ License Lamp Window	Left	J5457197
CJ-5, 7	1976-80	w/o License Lamp Window	Right	J5457198
CJ-5, 7	1976-80	w/ License Lamp Window, Chrome	Left	5457197C
CJ-5, 7	1976-80	w/o License Lamp Window, Chrome	Right	5457198C
CJ-5, 7, 8	1981-86	w/ Side Marker & License Lamp	Left	J5758255
CJ-5, 7, 8	1981-86	w/ Side Marker Lamp	Right	J5758254
CJ-5, 7, 8	1981-86	w/ Side Marker & License Lamp	Left	5758255C
CJ-5, 7, 8	1981-86	w/ Side Marker Lamp	Right	5758254C

Tail Lamp Lenses

Model	Year	Comments	Position	Replaces Part #
CJ-3B, 5, 6	1955-68	Attaches with Snap Ring	Left or Right	J0912240
CJ-5, 7, 8	1976-86	Attaches with 4 Screws	Left or Right	J8129642
SJ	1962-83-1/2		Left	J5459551*
SJ	1962-83-1/2		Right	J5459552
J-Series Sportside	1974-86	Attaches with 4 Screws	Left or Right	J8129642

* Part Not Currently Available

Copyright © 2014 Crown Automotive Sales Co., Inc. All rights reserved.

Front Side Marker Lamps

Model	Year	Comments	Position	Replaces Part #
CJ-5, 6, 7, 8	1972-86	Amber	Left or Right	J0994020
C101 Commando	1966-71	Amber	Left or Right	J0994020
SJ, J-Series	1974-91	Amber	Left or Right	J0994020

Rear Side Marker Lamps

Model	Year	Comments	Position	Replaces Part #
CJ-5, 6, 7	1972-80	Red	Left or Right	J0994021
SJ, J-Series	1972-91	Red	Left or Right	J0994021

Side Marker Lamp Kits

Model	Year	Comments	Position	Replaces Part #
CJ-5, 6, 7, 8	1972-86	Includes Amber Lamp, Bulb & Wiring	Front, Left or Right	994020K
C101 Commando	1966-71	Includes Amber Lamp, Bulb & Wiring	Front, Left or Right	994020K
SJ, J-Series	1974-91	Includes Amber Lamp, Bulb & Wiring	Front, Left or Right	994020K
CJ-5, 6, 7	1972-80	Includes Red Lamp, Bulb & Wiring	Rear, Left or Right	994021K
SJ, J-Series	1972-91	Includes Red Lamp, Bulb & Wiring	Rear, Left or Right	994021K

Speedometer Assemblies

Model	Year	Comments	Replaces Part #
CJ-2A, 3A, 3B	1945-56	Speedometer reads up to 60 MPH	640131
CJ-5, 6, 7	1955-79	Speedometer reads up to 90 MPH; Includes Fuel and Temperature Gauges	914845
CJ-3B, 5, 6, 7, 8	1955-86	Speedometer reads up to 140 KPH; Includes Fuel and Temperature Gauges	988573
CJ-5, 7, 8	1980-86	Speedometer reads up to 85 MPH; Includes Fuel and Temperature Gauges	J5761110

Tachometers

Model	Year	Comments	Replaces Part #
CJ-5, 6, 7, 8	1976-86	Works with 4, 6, or 8 Cylinder Engines	J5459418

Voltmeters

Model	Year	Replaces Part #
CJ-5, 6, 7, 8	1976-86	J8126659

Copyright © 2014 Crown Automotive Sales Co., Inc. All rights reserved.

Oil Pressure Gauges

Model	Year	Comments	Replaces Part #
CJ-5, 6	1965-72	w/ 80 lb. Electrical Gauge	J0988577
CJ-5, 7	1977-80	w/ 4 Threaded Studs on Gauge	J5460640
CJ-5, 7, 8	1979-86	w/ 3 Threaded Studs on Gauge	J5750279
SJ, J-Series	1973-75		J8122473
SJ, J-Series	1976-84		J8126929

Temperature Gauges

Model	Year	Comments		Replaces Part #
CJ-3B, 5, 6	1955-71	w/ no voltage regulator on back of cluster		J8124670
CJ-5, 6	1972-75			J8124670
CJ-5, 7, 8	1976-86			J8126920
SJ, J-Series	1976-84			J8126928

Oil Pressure Sending Units

Model	Year	Engine	Comments	Replaces Part #
CJ-3B, 5, 6, FC-150, C101 Commando, Sedan Delivery, Station Wagon	1957-71	2.2L (4-134) F-Head	w/ Indicator Light	J0938092
CJ-5, 6	1966-74	3.8L (6-232), 4.2L (6-258), 5.0L (V8-304)	w/ 80 lb. oil pressure gauge	J5460643
CJ-5, 7	1976-79	3.8L (6-232), 4.2L (6-258), 5.0L (V8-304)	w/ Gauge w/ 4 threaded studs	J5460643
CJ-5, 6, 7	1975-79	3.8L (6-232), 4.2L (6-258), 5.0L (V8-304)	w/ Gauge w/ 3 threaded studs	J3212004
CJ-5, 7, 8	1980-86	AMC 2.5L (4-150), 4.2L (6-258), 5.0L (V8-304)	w/ Gauge	J3212004
Pickup	1962-65	3.8L (6-230)	w/ Indicator Light	J0938092
SJ, J-Series	1974-85	4.2L (6-258), 5.9L (V8-360), 6.6L (V8-401)	w/ Gauge	J3212004
SJ, J-Series	1986-91	4.2L (6-258), 5.9L (V8-360)	W/ Gauge	53005218

Copyright © 2014 Crown Automotive Sales Co., Inc. All rights reserved.

Coolant Temperature Sensors

Model	Year	Engine		Replaces Part #
CJ-5, 6, 7, 8	1972-86	AMC 2.5L (4-150), 3.8L (6-232), 4.2L (6-258), 5.0L (V8-304)		J3177594
SJ, J-Series	1972-85	4.2L (6-258), 5.9L (V8-360), 6.6L (V8-401)		J3177594
SJ, J-Series	1986-91	4.2L (6-258), 5.9L (V8-360)		53005056

Fuel Sending Units

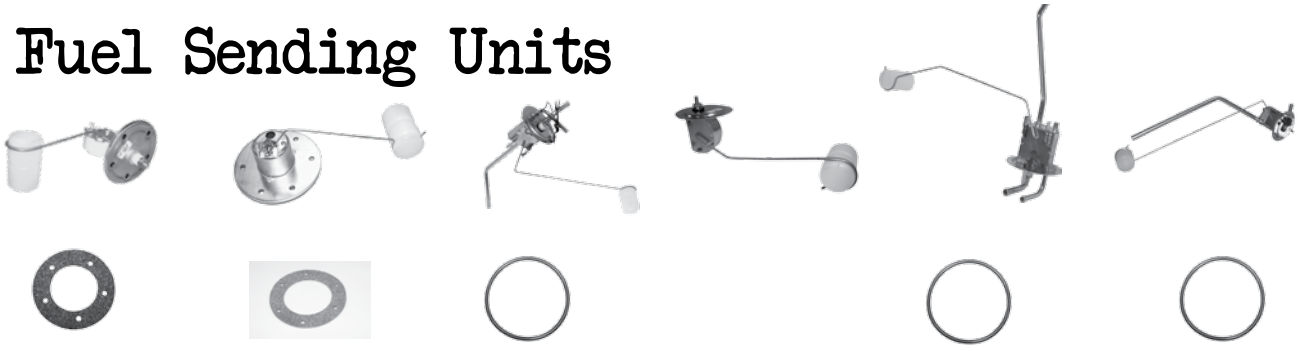

Model	Year	Comments	Replaces Part #	Gasket (Replaces Part #)
CJ-2A, 3A, 3B	1945-56	w/ 5-Bolt Sending Unit	J0640694	648927
CJ-3B, 5, 6	1955-66	w/ 6-Bolt Sending Unit	J0914850	635641
CJ-5, 6, 7, 8	1969-86	w/ Rear-Mounted 15-Gallon Tank	J5357373	J0941521
SJ	1970-79		J5361468	
SJ	1980-85		J5363490	J0941521
J-Series	1962-79		J5357677	J0941521

Speedometer Cables

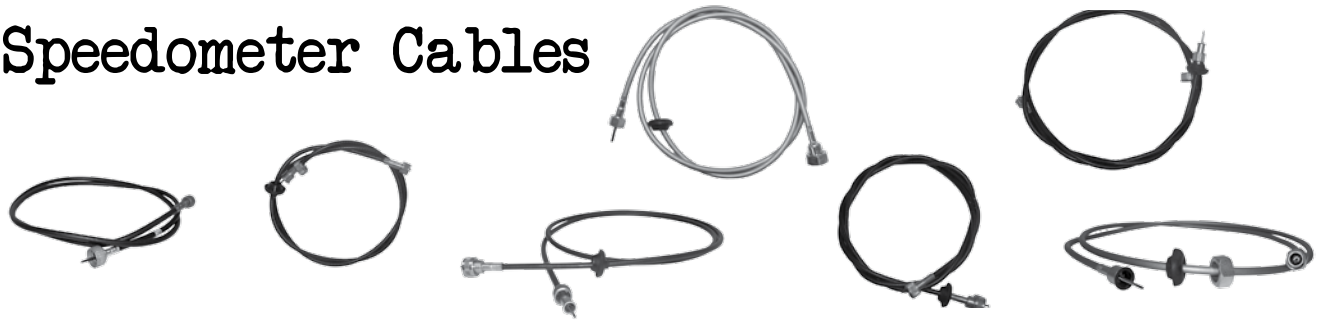

Model	Year	Comments	Length	Replaces Part #
CJ-5	1963-76	w/ 4-Speed Transmission	67″	J5351775
CJ-5, 7	1976-79	w/ Automatic Transmission	80″	J5351776
CJ-5, 7, 8	1977-86	w/ Manual Transmission	69″	J5351777
MB, CJ-2A, 3A, 3B, 5, 6, FC-150,FC-170	1941-71	w/ T84, T90 Transmission	60″	J5351778
CJ-5, 7, 8	1980-83	w/ GM 2.5L (4-151) Engine w/o Cruise Control	62″	J5752395
SJ, J-Series	1982-86	w/ 4.2L (6-258) Engine w/ T4 Transmission w/o Cruise Control	81.5″	J5752282
SJ, J-Series	1981-86	w/ 4.2L (6-258) Engine w/ Automatic Transmission w/o Cruise Control	81.5″	J5752282
SJ, J-Series	1981-90	w/ 5.9L (V8-360) w/ Automatic Transmission w/o Cruise Control	81.5″	J5752282
SJ, J-Series	1981	w/ 5.9L (V8-360) w/ NP219 Transfer Case w/ Cruise Control	72″	J5752285

Copyright © 2014 Crown Automotive Sales Co., Inc. All rights reserved.

Notes:

Copyright © 2014 Crown Automotive Sales Co., Inc. All rights reserved.

FUEL

Fuel Pumps 6-2
Carburetors 6-3
Carburetor Repair Kits. 6-3
Fuel Tanks 6-4
Fuel Tank Caps 6-4
Fuel Filters 6-5
Flexible Air Cleaner Hoses 6-6
Air Cleaner Horns 6-6
Hot Air Ducts 6-6
Air Filters. 6-7
E.G.R. Valve Gaskets 6-7
Fuel Hoses 6-7
Accelerator Cables 6-8
Exhaust Emission Air Pump Belts 6-8

Copyright © 2014 Crown Automotive Sales Co., Inc. All rights reserved.

Fuel Pumps

Replaces Part #	Years	Model	Engine	Comment
J0912017	1941-45 1945-49 1948-53 1953-68 1955-71 1955-71 1947-63	MB CJ-2A CJ-3A CJ-3B CJ-5 CJ-6 FC-150, C101 Commando, VJ Jeepster, Willys Pickup, Station Wagon, Delivery Sedan	2.2L (4L-134) 2.2L (4L-134) 2.2L (4L-134) 2.2L (4F-134) 2.2L (4F-134) 2.2L (4F-134) 2.2L (4-134) F or L	w/o Vacuum Pump
J0120206	1953-68 1955-71 1955-71	CJ-3B CJ-5 CJ-6	2.2L (4F-134) 2.2L (4F-134) 2.2L (4F-134)	Vacuum Pump
J8132364	1980-83 1980-83 1981-83	CJ-5 CJ-7 CJ-8	2.5L (S4-151) GM 2.5L (S4-151) GM 2.5L (S4-151) GM	
J3225283	1971-78 1971-75 1976-78 1971-78 1971-75 1976-78	CJ-5 CJ-6 CJ-7 CJ-5 CJ-6 CJ-7	4.2L (S6-258) 4.2L (S6-258) 4.2L (S6-258) 3.8L (S6-232) 3.8L (S6-232) 3.8L (S6-232)	w/ 1 Barrel Carburetor
J6416783	1967-71 1967-71 1967-71	CJ-5 CJ-6 C101 Commando	3.8L (V6-225) Buick 3.8L (V6-225) Buick 3.8L (V6-225) Buick	
J8124460	1971-75 1971-75 1971-75	CJ-5 CJ-6 SJ, J-Series	5.0L (V8-304) 5.0L (V8-304) 5.9L (V8-360)	
J3228191	1977-78 1977-78 1977-83 1977-86 1981-86 1983 1983-86 1983-86 1977-86	CJ-5 CJ-7 CJ-5 CJ-7 CJ-8 CJ-5 CJ-7 CJ-8 SJ, J-Series	3.8L (S6-232) 3.8L (S6-232) 4.2L (S6-258) 4.2L (S6-258) 4.2L (S6-258) 2.5L (S4-150) AMC 2.5L (S4-150) AMC 2.5L (S4-150) AMC 4.2L (S6-258)	w/ 2 Barrel Carburetor
J0735994	1965-62 1965-64 1967-64	Willys Pickup Willys Station Wagon FC-170	3.8L (S6-226) 3.8L (S6-226) 3.8L (S6-226)	
J0930144	1963-64 1963-64	Willys Pickup SJ	 3.8L (6-230) 3.8L (6-230)	
J3228195	1976-81 1976-81 1981 1976-91	CJ-5 CJ-7 CJ-8 SJ, J-Series	5.0L (V8-304) 5.0L (V8-304) 5.0L (V8-304) 5.9L (V8-360) Engine	

Copyright © 2014 Crown Automotive Sales Co., Inc. All rights reserved.

Carburetors

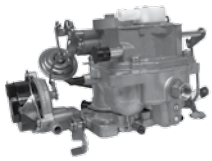

Replaces Part #	Years	Model	Engine	Comment
J0923806	1941-45	MB	2.2L (4L-134)	
	1945-49	CJ-2A	2.2L (4L-134)	
	1948-53	CJ-3A	2.2L (4L-134)	
J0923808	1953-68	CJ-3B	2.2L (4F-134)	6-5/8" from Base
	1955-71	CJ-5	2.2L (4F-134)	
	1955-71	CJ-6	2.2L (4F-134)	
	1956-64	FC150	2.2L (4F-134)	
K55038	1966-78	CJ-5	3.8L (6-232), 4.2L (6-258)	Weber Carburetor
	1966-75	CJ-6	3.8L (6-232), 4.2L (6-258)	
	1976-78	CJ-7	3.8L (6-232), 4.2L (6-258)	
BBD42S	1981-83	CJ-5	4.2L (S6-258)	w/o Stepper Motor
	1981-86	CJ-7	4.2L (S6-258)	
	1981-86	CJ-8	4.2L (S6-258)	
	1981-86	SJ, J-Series	4.2L (S6-258)	
83320007	1981-83	CJ-5	4.2L (S6-258)	w/ Stepper Motor
	1981-86	CJ-7	4.2L (S6-258)	
	1981-86	CJ-8	4.2L (S6-258)	
	1981-86	SJ, J-Series	4.2L (S6-258)	

Carburetor Repair Kits

Replaces Part #	Years	Model	Engine	Comment
J0647745	1945-49	CJ-2A	2.2L (4L-134)	Carter Type, 1 Barrel
	1948-53	CJ-3A	2.2L (4L-134)	
J0807885	All	M38A1	2.2L (4F-134)	Carter Type, 1 Barrel
J0924160	1953-68	CJ-3B	2.2L (4F-134)	Carter YF Type, 1 Barrel
	1955-71	CJ-5	2.2L (4F-134)	
	1955-71	CJ-6	2.2L (4F-134)	
	1956-64	FC150	2.2L (4F-134)	
83300057	1973-78	CJ-5	3.8L (S6-232)	Carter YF Type, 1 Barrel
	1973-78	CJ-5	4.2L (S6-258)	
	1973-75	CJ-6	3.8L (S6-232)	
	1973-75	CJ-6	4.2L (S6-258)	
	1976-78	CJ-7	3.8L (S6-232)	
	1976-78	CJ-7	4.2L (S6-258)	
	1973-76	SJ, J-Series	3.8L (S6-232)	
	1973-76	SJ, J-Series	4.2L (S6-258)	
J8134232	1977-83	CJ-5	4.2L (S6-258)	Carter BBD Type, 2 Barrels
	1977-86	CJ-7	4.2L (S6-258)	
	1981-86	CJ-8	4.2L (S6-258)	
	1977-86	SJ, J-Series	4.2L (S6-258)	
83502174	1974-91	SJ, J-Series	5.9L (V8-360)	Motorcraft Type, 2 Barrels
	1974-81	CJ-5	5.0L (V8-304)	
	1974-75	CJ-6	5.0L (V8-304)	
	1976-81	CJ-7	5.0L (V8-304)	
	1981	CJ-8	5.0L (V8-304)	

Copyright © 2014 Crown Automotive Sales Co., Inc. All rights reserved.

Fuel Tanks

Replaces Part #	Years	Model	Construction	Comment
640685 640685PL	1945-49 1948-49 1953-56 1945-49 1948-49 1953-56	CJ-2A CJ-3A CJ-3B CJ-2A CJ-3A CJ-3B	Metal Plastic	Under Seat Tank, Short Straight Neck; Metric Plug: M12 x 1.50; Use J0640694 Float Gauge
J0912008 912008PL	1955-70 1955-70 1955-70 1955-70	CJ-5 CJ-6 CJ-5 CJ-6	Metal Plastic	Under Seat Tank, Long Angled Neck; Metric Plug: M12 x 1.50; 6 Screw Sending Unit; Use J0914850 Float Gauge
J5355314	1970-76 1970-75 1976 1972-73	CJ-5 CJ-6 CJ-7 C104 Commando	Metal - 15 Gallon	Rear Mounted Tank, 25-1/4" Long, 18-3/4" Wide, 10-7/8" High; 2"" O.D. Filler Neck, 7" Long; Vent Tube 7-1/2" Long; Use J5357373 Float Gauge

Caps, Fuel Tank

Replaces Part #	Years	Model	Engine	Comment
J0908593	1945-49 1948-53 1953-68 1955-71 1955-71 1950-52 1952-63	CJ-2A CJ-3A CJ-3B CJ-5 CJ-6 M38 M38A1		Non-Locking
52003768	1972-83 1972-75 1976-86 1981-86 1981-91	CJ-5 CJ-6 CJ-7 CJ-8 SJ, J-Series		Non-Locking, Non-Vented Fuel Filler Cap
J8123141	1965-74	SJ, J-Series		Non-Locking, Primed
J5350828	1980-83 1980-86 1981-86 1980-91	CJ-5 CJ-7 CJ-8 SJ, J-Series		Locking, Non-Vented
J0934197	1981-82 1981-82 1981-82	CJ-5 (Export) CJ-7 (Export) CJ-8 (Export)		Locking, Vented Fuel Filler Cap

Copyright © 2014 Crown Automotive Sales Co., Inc. All rights reserved.

Filters, Fuel (In Line)

Replaces Part #	Years	Model	Engine	Comment
J8129383	1980-83	CJ-5	2.5L (S4-151) GM	Includes Fuel Filter, Hose & Clamps; Single Inlet, Dual Outlet
	1983	CJ-5	2.5L (S4-150)	
	1975	CJ-6	4.2L (S6-258)	
	1975	CJ-6	5.0L (V8-304)	
	1976-86	CJ-7	4.2L (S6-258)	
	1976-86	CJ-7	5.0L (V8-304)	
	1981-83	CJ-8	2.5L (S4-151) GM	
	1983-86	CJ-8	2.5L (S4-150) AMC	
	1981-86	CJ-8	4.2L (S6-258)	
	1981	CJ-8	5.0L (V8-304)	
	1973-86	SJ, J-Series	4.2L (S6-258)	
	1973-91	SJ, J-Series	5.9L (V8-360)	
J8992638	1967-71	C101 Commando	3.8L (V6-225) Buick	Includes Fuel Filter, Hose and Clamps Single Inlet, Single Outlet
	1967-71	C104 Commando	3.8L (V6-225) Buick	
	1967-71	CJ-5	3.8L (V6-225) Buick	
	1972-75	CJ-5	3.8L (S6-232)	
	1972-75	CJ-5	4.2L (S6-258)	
	1972-75	CJ-5	5.0L (V8-304)	
	1967-71	CJ-6	3.8L (V6-225) Buick	
	1972-75	CJ-6	3.8L (S6-232)	
	1972-75	CJ-6	4.2L (S6-258)	
	1972-75	CJ-6	5.0L (V8-304)	
	1972-75	J-Series	4.2L (S6-258), 5.9L (V8-360)	
	1965-67	SJ, J-Series	5.4 (V8-327)	
J3229443	1974-83	CJ-5	4.2L (S6-258)	Single Inlet, Dual Outlet
	1974-75	CJ-6	4.2L (S6-258)	
	1976-86	CJ-7	4.2L (S6-258)	
	1981-86	CJ-8	4.2L (S6-258)	

Filters, Fuel (In Tank)

Replaces Part #	Years	Model	Engine	Comment
J3230376	1972-83	CJ-5		w/ 15 Gallon Tank
	1972-75	CJ-6		w/ 15 Gallon Tank
	1976-83	CJ-7		w/ 15 Gallon Tank
	1981-83	CJ-8		w/ 15 Gallon Tank
J5357421	1977-79	SJ, J-Series		
J5361389	1981-83	CJ-5		20 Gallon Tank
	1981-86	CJ-6		20 Gallon Tank
	1981-86	CJ-8		20 Gallon Tank
	1980-91	SJ, J-Series		

Copyright © 2014 Crown Automotive Sales Co., Inc. All rights reserved.

Hoses, Flexible Air Cleaner

Replaces Part #	Years	Model	Engine	Comment
J0926945	1953-68 1955-71 1955-71	CJ-3B CJ-5 CJ-6	2.2L (4F-134) 2.2L (4F-134) 2.2L (4F-134)	Air Cleaner To Carburetor Horn Hose

Horns, Air Cleaner

Replaces Part #	Years	Model	Engine	Comment
J0809785	1953-68 1955-71 1955-71 1967-64	CJ-3B CJ-5 CJ-6 FC150	2.2L (4F-134) 2.2L (4F-134) 2.2L (4F-134) 2.2L (4F-134)	

Ducts, Hot Air

Replaces Part #	Years	Model	Engine	Comment
33003391	1974-78 1974-75 1976-78 1974-83 1974-75 1976-86 1981-86 1974-81 1974-75 1976-81 1981 1983 1983-86 1983-86	CJ-5 CJ-6 CJ-7 CJ-5 CJ-6 CJ-7 CJ-8 CJ-5 CJ-6 CJ-7 CJ-8 CJ-5 CJ-7 CJ-8	3.8L (S6-232) 3.8L (S6-232) 3.8L (S6-232) 4.2L (S6-258) 4.2L (S6-258) 4.2L (S6-258) 4.2L (S6-258) 5.0L (V8-304) 5.0L (V8-304) 5.0L (V8-304) 5.0L (V8-304) 2.5L (S4-150) AMC 2.5L (S4-150) AMC 2.5L (S4-150) AMC	Hot Air Duct (Exhaust Manifold To Air Cleaner)

Copyright © 2014 Crown Automotive Sales Co., Inc. All rights reserved.

Filters, Air

Replaces Part #	Years	Model	Engine	Comment
J8991386	1974-83	CJ-5	4.2L (S6-258)	
	1974-75	CJ-6	4.2L (S6-258)	
	1976-86	CJ-7	4.2L (S6-258)	
	1981-86	CJ-8	4.2L (S6-258)	
	1980-83	CJ-5	2.5L (S4-151) GM	
	1980-83	CJ-7	2.5L (S4-151) GM	
	1981-83	CJ-8	2.5L (S4-151) GM	
	1983	CJ-5	2.5L (S4-150)	
	1983-86	CJ-7	2.5L (S4-150)	
	1983-86	CJ-8	2.5L (S4-150)	
	1974-88	SJ, J-Series	4.2L (S6-258)	
J8992661	1973-91	SJ, J-Series	5.9L (V8-360)	
	1972-81	CJ-5	5.0L (V8-304)	
	1972-75	CJ-6	5.0L (V8-304)	
	1976-81	CJ-7	5.0L (V8-304)	
	1981	CJ-8	5.0L (V8-304)	

Gaskets, E.G.R. Valve

Replaces Part #	Years	Model	Engine	Comment
J3221283	1983-86	CJ-7,8	2.5L (S4-150) AMC	
	1981-86	CJ-5,7,8	4.2L (6-258)	
	1981-90	SJ, J-Series	4.2L (6-258)	
	1981-91	SJ, J-Series	5.9L (V8-360)	

Hoses, Fuel

Replaces Part #	Years	Model	Engine	Comment
J0802040	1945-49	CJ-2A	2.2L (L4/134)	7" Long
	1948-53	CJ-3A	2.2L (L4/134)	To Fuel Pump
	1953-68	CJ-3B	2.2L (F4-134)	
	1955-71	CJ-5	2.2L (F4-134)	
	1955-71	CJ-6	2.2L (F4-134)	
	1947-54	Willys Pickup Truck	2.2L (4-134) F or L	
	46/55	Willys Station Wagon	2.2L (4-134) F or L	

Copyright © 2014 Crown Automotive Sales Co., Inc. All rights reserved.

Cables, Accelerator

Replaces Part #	Years	Model	Engine	Comment
J0999923	1972-75 1972-75 1972-75 1972-75	CJ-5 CJ-5 CJ-6 CJ-6	3.8L (S6-232) 4.2L (S6-258) 3.8L (S6-232) 4.2L (S6-258)	Accelerator Cable; 27-3/4" Overall Length
J0999893	1972-75 1975-75	CJ-5 CJ-6	5.0L (V8-304) 5.0L (V8-304)	35-1/2" Overall Length, 25-1/2" Conduit Length
J5356484	1976-77 1976-77 1976-77 1976-77	CJ-5 CJ-5 CJ-7 CJ-7	3.8L (S6-232) 4.2L (S6-258) 3.8L (S6-232) 4.2L (S6-258)	30-1/2" Overall Length
J5356483	1976 1976	CJ-5 CJ-7	5.0L (V8-304) 5.0L (V8-304)	24-1/4" Overall Length
J5358677	1977-78 1977-78 1979-80 1981-83 1977-78 1977-78 1979-80 1981-86 1981-86	CJ-5 CJ-5 CJ-5 CJ-5 CJ-7 CJ-7 CJ-7 CJ-7 CJ-8	3.8L (S6-232) 4.2L (S6-258) 4.2L (S6-258) 4.2L (S6-258) LHD, Export Only 3.8L (S6-232) 4.2L (S6-258) 4.2L (S6-258) 4.2L (S6-258) LHD, Export Only 4.2L (S6-258) LHD, Export Only	21-3/4" Overall Length
J5357931	1977-81 1977-81 1981	CJ-5 CJ-7 CJ-8	5.0L (V8-304) 5.0L (V8-304) 5.0L (V8-304)	18" Overall Length
J5362801	1981-83 1981-86 1981-86	CJ-5 CJ-7 CJ-8	4.2L (S6-258) 4.2L (S6-258) 4.2L (S6-258)	24-1/4" Overall Length
J0942945	1966-71	C101 Commando	2.2L (4-134)	20-1/8" Overall Length
J0940063	1965-67	SJ, J-Series	5.4L (V8-327)	
J947778	1968-71	SJ, J-Series	5.7L (V8-350)	
J0940896	1971-72	SJ, J-Series	3.8L (S6-232)	
J5351388	1971-72 1971-72	SJ, J-Series SJ, J-Series	5.9L (V8-360) 6.6L (V8-401)	
J5351420	1973-76	SJ, J-Series	4.2L (S6-258)	
J5351419	1974-77 1974-77	SJ, J-Series SJ, J-Series	5.9L (V8-360) 6.6L (V8-401)	
J5357703	1977-80 1981-86	SJ, J-Series SJ, J-Series (Export)	4.2L (S6-258) 4.2L (S6-258)	
53005205	1977-91	SJ, J-Series	5.9L (V8-360)	

Copyright © 2014 Crown Automotive Sales Co., Inc. All rights reserved.

Belts, Crankshaft to Exhaust Emission Air Pump

Replaces Part #	Years	Model	Engine	Comment
J3229607	1973-74	CJ-5	3.8L (6-232)	
	1973-74	CJ-5	4.2L (6-258)	
	1973-74	CJ-6	3.8L (6-232)	
	1973-74	CJ-6	4.2L (6-258)	
	1973-74	SJ, J-Series	3.8L (6-232)	
	1973-74	SJ, J-Series	4.2L (6-258)	
	1973	C104 Commando	4.2L (6-258)	
JY017465	1976-78	CJ-5	3.8L (6-232)	w/ Manual Steering
	1976-82	CJ-5	4.2L (6-258)	w/ Manual Steering
	1976-78	CJ-7	3.8L (6-232)	w/ Manual Steering
	1976-82	CJ-7	4.2L (6-258)	w/ Manual Steering
JY013541	1976-81	CJ-5	5.0L (V8-304)	
	1976-81	CJ-7	5.0L (V8-304)	
	1976-81	SJ, J-Series	5.9L (V8-360)	
	1976-79	SJ, J-Series	6.6L (V8-401)	
	1976	SJ, J-Series	5.9L (V8-360)	
	1976	SJ, J-Series	6.6L (V8-401)	

Belts, Power Steering Pump to Exhaust Emission Air Pump

Replaces Part #	Years	Model	Engine	Comment
JY013251	1976-78	CJ-5	3.8L (6-232)	
	1976-83	CJ-5	4.2L (6-258)	
	1976-78	CJ-7	3.8L (6-232)	
	1976-86	CJ-7	4.2L (6-258)	
	1981-86	CJ-8	4.2L (6-258)	
	1977-86	SJ, J-Series	4.2L (6-258)	
JY013291	1976-81	CJ-5	5.0L (V8-304)	
	1976-81	CJ-7	5.0L (V8-304)	
	1981	CJ-8	5.0L (V8-304)	
	1976-81	SJ, J-Series	5.9L (V8-360)	
	1976-79	SJ, J-Series	6.6L (V8-401)	

Copyright © 2014 Crown Automotive Sales Co., Inc. All rights reserved.

Notes:

Copyright © 2014 Crown Automotive Sales Co., Inc. All rights reserved.

ENGINE

4-134 L-Head (Go Devil) Engine
1941-1953 MB, CJ-2A, 3A, M38
1946-1953 Willys Pickup, Sedan Delivery, Station Wagon
1948-1950 VJ Jeepster 7-2

4-134 F-Head (Hurricane) Engine
1952-1971 CJ-3B, 5, 6, M38-A1
1956-1964 FC-150
1966-1971 C101 Commando
1950-1955 VJ Jeepster, Willys Pickup,
Sedan Delivery, Station Wagon. 7-6

3.8L (S6-232) & 4.2L (S6-258) Engines
3.8L (S6-232): 1965-1979 CJ-5, 6, 7, SJ, J-Series
4.2L (S6-258): 1971-1986 CJ-5, 6, 7, 8, C104 Commando, SJ, J-Series 7-10

AMC V8 Engines
5.0L (V8-304) 1971-1981 CJ-5, 6, 7, 8 C104 Commando
5.9L (V8-360) 1970-1991 SJ, J-Series
6.6L (V8-401) 1971-1979 SJ, J-Series 7-16

GM 2.5L (4-151) Engine
1980-1983 CJ-5, 7, 8. 7-20

AMC 2.5L (4-150) Engine
1983-1986 CJ-5, 7, 8. 7-22

Miscellaneous Engine Components
S6-226 Super Hurricane Engine
V6-225 Buick Dauntless Engine
S6-230 Tornado Engine
AMC V8-327 Engine
Buick V8-350 Engine 7-26

Copyright © 2014 Crown Automotive Sales Co., Inc. All rights reserved.

4-134 L-Head (Go Devil) Engine

1941-1953 MB, CJ-2A, 3A, M38
1946-1953 Willys Pickup, Sedan Delivery, Station Wagon
1948-1950 VJ Jeepster

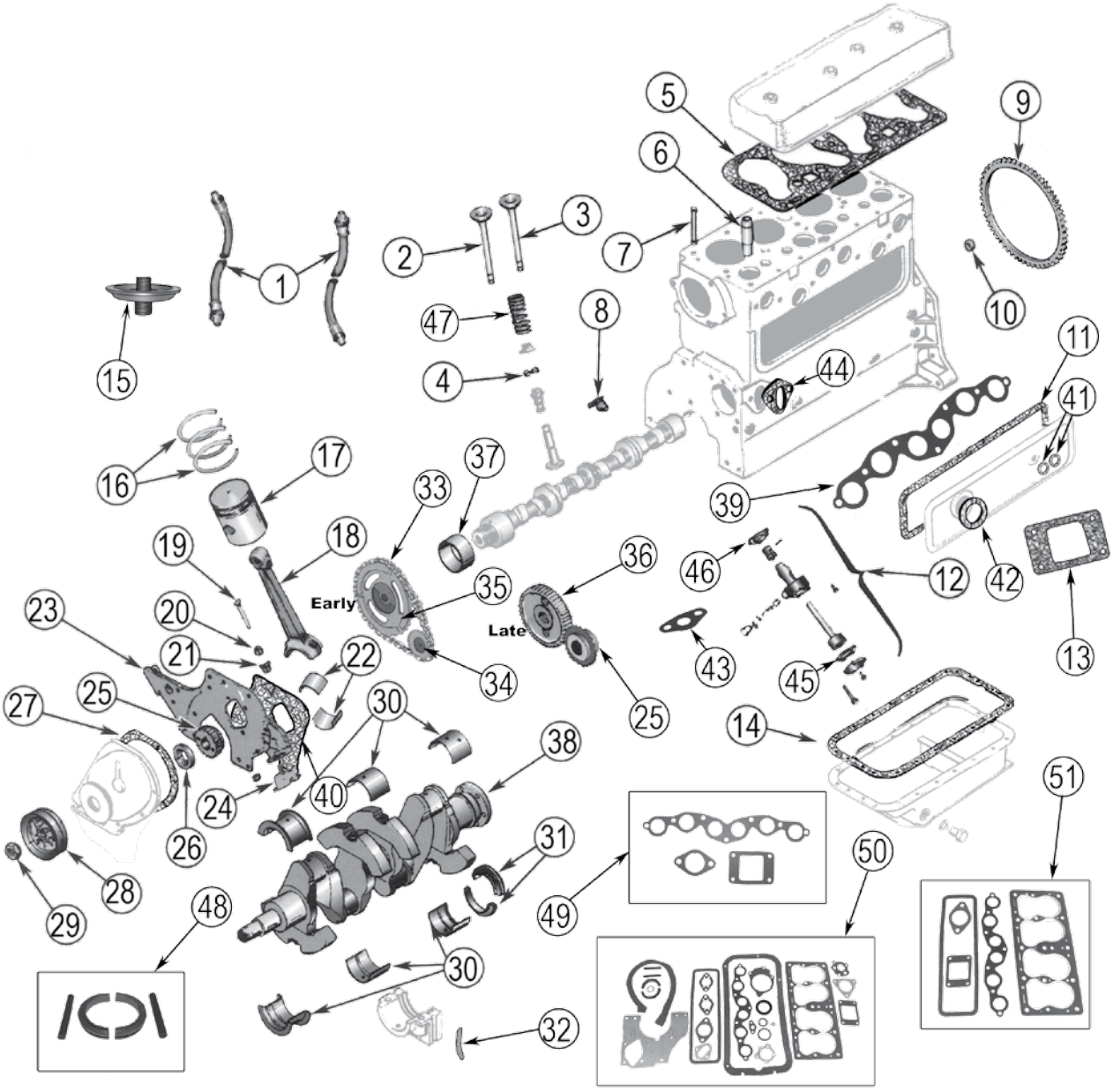

Copyright © 2014 Crown Automotive Sales Co., Inc. All rights reserved.

4-134 L-Head (Go Devil) Engine

Item #	Description	Application	Comments	Replaces Part #
1	Hose, Oil Filter	All Except MB, M38 MB All Except MB, M38 MB, M38	Inlet - 23" Long Inlet - 21.5" Long Outlet - 12.5" Long Outlet - 9.5" Long	J0647584 A1197 J0910290 A1198
2	Valve, Intake	All	Standard	637182
3	Valve, Exhaust	All	Standard	J0637183
4	Lock, Valve Spring Retainer	All	8 Required	J0375994
5	Gasket, Cylinder Head	All Except MB		J0638540
6	Guide, Valve	All All	Intake; 2.74" Long Exhaust; 3" Long	119136 J0119137
7	Stud, Cylinder Head to Block	All	15 Required	J0349368
8	Draincock, Engine Block	All		JA001126
9	Ring Gear, Flywheel	MB, CJ-2A "M38, Pickup, Station Wagon, Sedan Delivery CJ-3A Before Serial #30973" CJ-3A After Serial #30973	97 Teeth 124 Teeth 129 Teeth	J0635394 641955 J0802925
10	Bushing, Crankshaft Pilot	All		J0639578
11	Gasket, Valve Cover	All		J0630305
12	Oil Pump	MB & CJ-2A w/ Timing Chain All Except MB & CJ-2A w/ Timing Chain	w/ Timing Chain w/ Gear-to-Gear Timing	J0804769 J0804484
13	Gasket, Intake Manifold to Exhaust Manifold	All		J0634811
14	Gasket, Oil Pan	All		J0639980
15	Cover, Oil Filter	All	w/ Spin On Filter	J0929838
16	Ring Set, Piston	All All All All All All	Standard; 1 Required .010"; 1 Required .020"; 1 Required .030"; 1 Required .040"; 1 Required .060"; 1 Required	J0941885 J0941886 941887 941888 941889 941889.060
17	Piston	All All All All	Standard .020" .030" .040"	J8121654 J0801538 J0801539 J8121658
18	Rod, Connecting	All All	#1,3 #2,4	J0641774 J0641775
19	Bolt, Connecting Rod	All Except MB, CJ-2A before engine #89737	3/8"-24 Threads	J0641768
20	Nut, Connecting Rod	All Except MB, CJ-2A before engine #89737	3/8"-24 Threads	J0641769
21	Locknut, Connecting Rod	All	Stamped	G107823
22	Bearing, Connecting Rod	All All All All All	Standard; 4 Required .010"; 4 Required .020"; 4 Required .030"; 4 Required .040"; 4 Required	JA007233 A7234 A7235 A7236 A7237

Continued on Next Page

Copyright © 2014 Crown Automotive Sales Co., Inc. All rights reserved.

4-134 L-Head (Go Devil) Engine
(Continued)

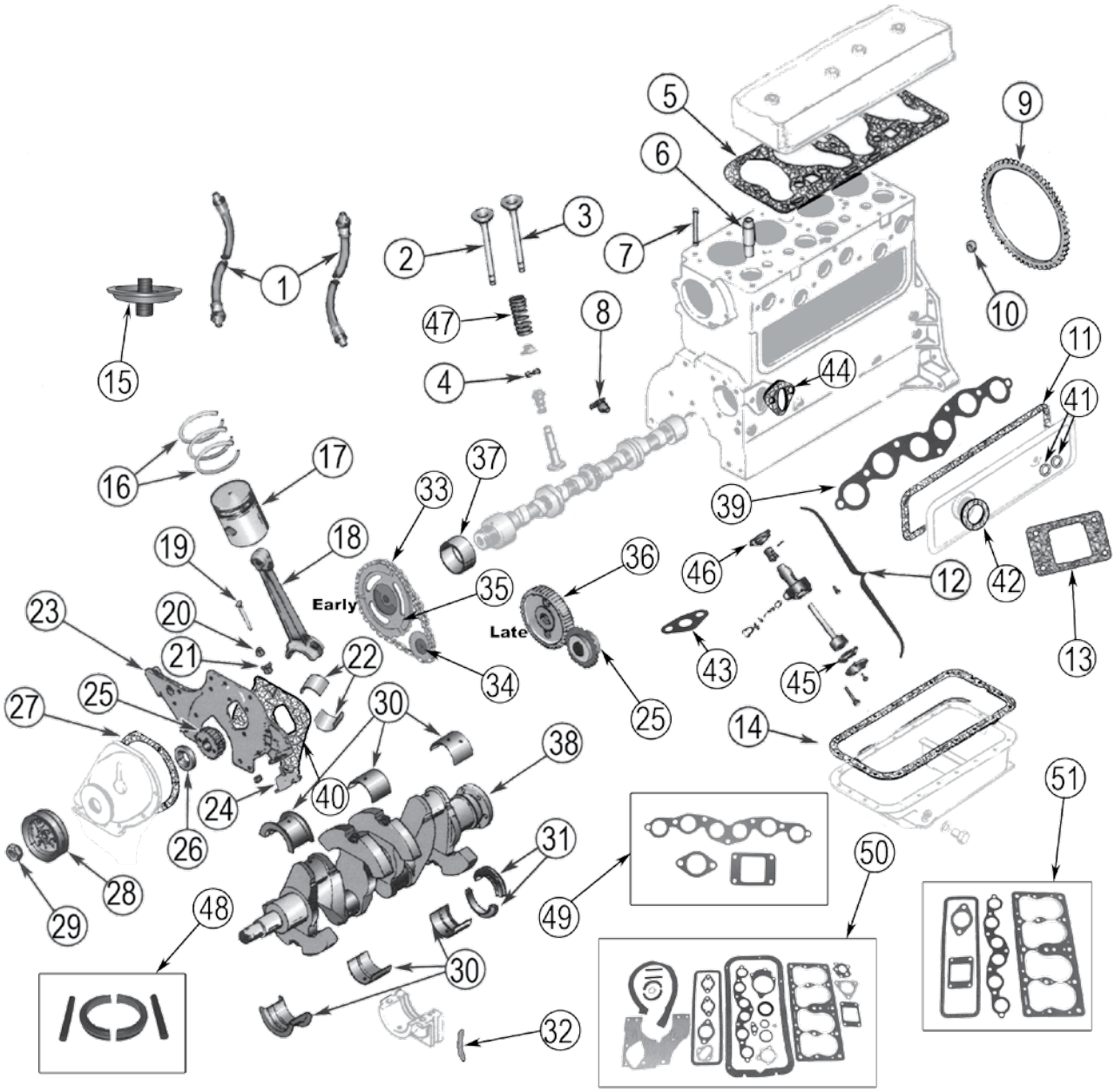

Copyright © 2014 Crown Automotive Sales Co., Inc. All rights reserved.

4-134 L-Head (Go Devil) Engine (Continued)

Item #	Description	Application	Comments	Replaces Part #
23	Plate, Engine, Front	CJ-3A		927719
24	Mount, Engine, Front	All Except M38	Left or Right	J0638629
25	Gear, Crankshaft Timing	All Except MB & CJ-2A w/ Timing Chain	w/ Gear-to-Gear Timing	J0641282
26	Seal, Crankshaft, Front	All Except MB & CJ-2A w/ Timing Chain	w/ Gear-to-Gear Timing	J0931634
27	Gasket, Timing Cover	All		J0630365
28	Pulley, Crankshaft Damper	MB, CJ-2A, 3A, M38	Double Groove	J0646698
29	Nut, Crankshaft Pulley	MB, CJ-2A, 3A, M38		J0638513
30	Bearing, Main Set	All All All All All	Standard; Includes All 3 Bearings .010"; Includes All 3 Bearings .020"; Includes All 3 Bearings .030"; Includes All 3 Bearings .040"; Includes All 3 Bearings	A6798 A6746 A6747 A6748 A6798-40
31	Seal, Rear Main	All	2 Required	J800093
32	Packing, Crankshaft Rear	All	2 Required	J0637790
33	Chain, Timing	MB & CJ-2A w/ Timing Chain	w/ Timing Chain	638457
34	Gear, Crankshaft Timing	MB & CJ-2A w/ Timing Chain	w/ Timing Chain	J0638459
35	Gear, Camshaft Timing	MB & CJ-2A w/ Timing Chain	w/ Timing Chain	638458 *
36	Gear, Camshaft Timing	All Except MB & CJ-2A w/ Timing Chain	w/ Gear-to-Gear Timing	J0948137
37	Bearing, Camshaft	All	1 Required	J0645595
38	Crankshaft	All Except MB & CJ-2A w/ Timing Chain	w/ Gear-to-Gear Timing	J0647078
39	Gasket, Intake & Exhaust Manifold to Engine	All		J0638640
40	Gasket, Front Engine Plate	MB & CJ-2A w/ Timing Chain All Except MB & CJ-2A w/ Timing Chain	w/ Timing Chain w/ Gear-to-Gear Timing	630359 641096
41	Gasket, Valve Cover Screw	All	2 Required	51875
42	Gasket,Ventilator	All		630299
43	Gasket, Oil Strainer Support	All		630398
44	Gasket, Fuel Pump	All		638737
45	Gasket, Oil Pump Cover	All		641482
46	Gasket, Oil Pump to Block			646147
47	Spring, Valve	All	Intake or Exhaust	J0638636
48	Rear Main Seal Kit	All	Includes 2 Rear Main Seal Halves and 2 Packing	800093K
49	Gasket Set, Exhaust Manifold	All	Includes 13, 38, and Manifold to Front Pipe Gasket	JA007835
50	Gasket Set, Overhaul	All	Includes 5, 11, 13, 14, 25, 26, 30, 31, 38, 39, 40, 41, 42, 43, 44, 45	J0810584
51	Gasket Set, Valve Grind	All	Includes 5, 11, 13, 38, 40	J0802030

*Not Currently Available

Copyright © 2014 Crown Automotive Sales Co., Inc. All rights reserved.

4-134 F-Head (Hurricane) Engine

1952-1971 CJ-3B, 5, 6, M38-A1
1956-1964 FC-150
1966-1971 C101 Commando
1950-1955 VJ Jeepster, Willys Pickup, Sedan Delivery, Station Wagon

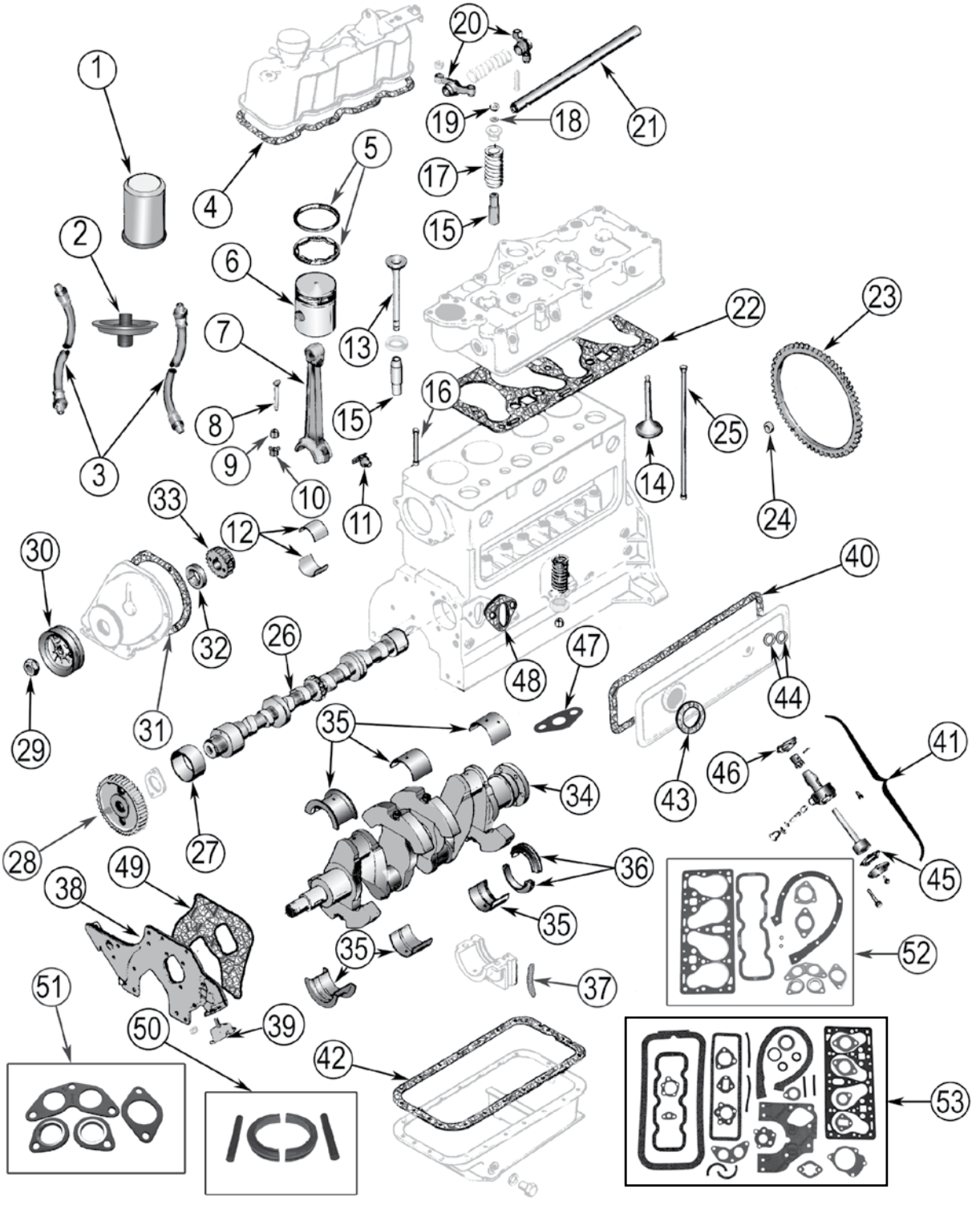

Copyright © 2014 Crown Automotive Sales Co., Inc. All rights reserved.

4-134 F-Head (Hurricane) Engine

Item #	Description	Application	Comments	Replaces Part #
1	Oil Filter	All	Disposable Type	J8993146
2	Cover, Oil Filter	All	w/ Spin On Filter	J0929838
3	Hose, Oil Filter	All Except M38-A1, C101 All Except M38-A1, C101, FC-150 FC-150 M38-A1	Inlet - 30.5" Long Outlet - 12" Long Outlet - 30.5" Long Outlet - 9.5" Long	J0647585 J0910290 J0647585 A1198
4	Gasket, Valve Cover	All	Top of Engine	J0648798
5	Ring Set, Piston	All All All All All All	Standard .010"; 1 Required .020"; 1 Required .030"; 1 Required .040"; 1 Required .060"; 1 Required	J0941885 J0941886 941887 941888 941889 941889.060
6	Piston	All All All All	Standard .020" .030" .040"	J8121654 J0801538 J0801539 J8121658
7	Rod, Connecting	All All	#1, 3 #2, 4	J0641774 J0641775
8	Bolt, Connecting Rod	All	3/8"-24 Threads	J0641768
9	Nut, Connecting Rod Bolt	All	3/8"-24 Threads	J0641769
10	Locknut, Connecting Rod	All	Stamped	G107823
11	Draincock, Engine Block	All		JA001126
12	Bearing, Connecting Rod	All All All All All	Standard .010" .020" .030" .040"	JA007233 A7234 A7235 A7236 A7237
13	Valve, Exhaust	All	Standard	J0928342
14	Valve, Intake	All	Standard	J0994946
15	Guide, Valve	All All	Intake; 2.375" Long Exhaust; 3" Long	119138 J0119137
16	Bolt, Cylinder Head to Block	All	4-1/4" Long; 14 Required	J0805730
17	Spring, Valve	All All	Intake Exhaust	J0800417 J0638636
18	Seal, Valve	All	Intake or Exhaust	J0800986
19	Lock, Valve Spring Retainer	All All	Exhaust Intake	J3242664 J0375994
20	Rocker Arm	All All	Left Right	J0805375* J0805376
21	Shaft, Rocker Arm	All		J0805368

*Not Currently Available

Continued on Next Page

Copyright © 2014 Crown Automotive Sales Co., Inc. All rights reserved.

4-134 F-Head (Hurricane) Engine
(Continued)

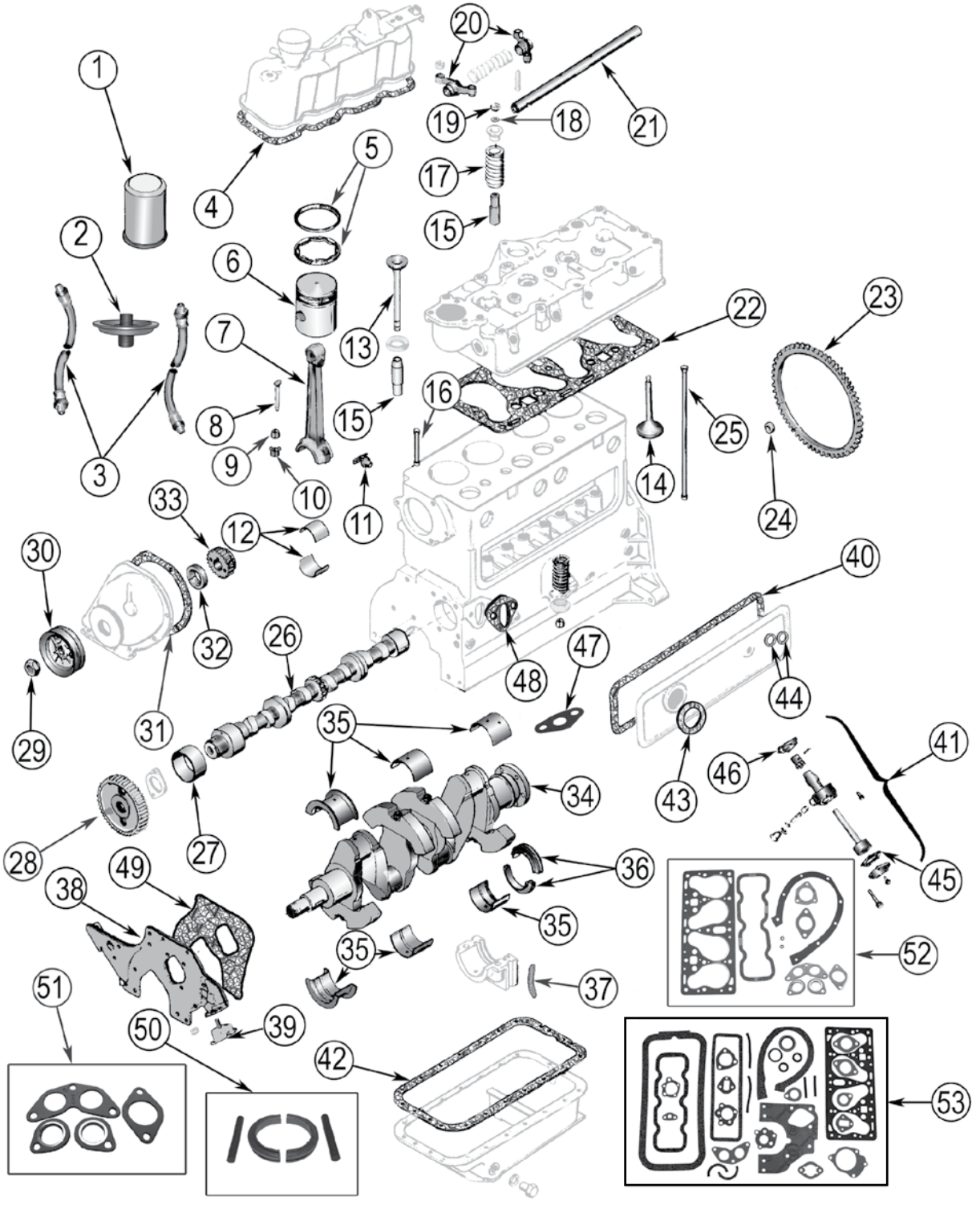

Copyright © 2014 Crown Automotive Sales Co., Inc. All rights reserved.

4-134 F-Head (Hurricane) Engine (Continued)

Item #	Description	Application	Comments	Replaces Part #
22	Gasket, Cylinder Head	All	w/o Emission Pump	J0807036
23	Ring Gear, Flywheel	All	129 Teeth	J0802925
24	Bushing, Crankshaft Pilot	All		J0639578
25	Push Rod, Valve	All	Intake	J0804622
26	Camshaft	All		J0800517
27	Bearing, Camshaft	All		J0645595
28	Gear, Camshaft Timing	All		J0948137
29	Nut, Crankshaft Pulley	All		J0638513
30	Pulley, Crankshaft Damper	All	Double Groove	J0646698
31	Gasket, Timing Cover	All		J0630365
32	Seal, Crankshaft, Front	All		J0931634
33	Gear, Crankshaft Timing	All		J0641282
34	Crankshaft	All		J0647078
35	Bearing, Main, Set	All All All All All	Standard; Includes All 3 Bearings .010"; Includes All 3 Bearings .020"; Includes All 3 Bearings .030"; Includes All 3 Bearings .040"; Includes All 3 Bearings	A6798 A6746 A6747 A6748 A6798.40
36	Seal, Rear Main	All	2 Required	J0800093
37	Packing, Crankshaft Rear	All	2 Required	J0637790
38	Plate, Engine, Front	CJ-5, 6, FC-150		927719
39	Mount, Engine, Front	All Except M38-A1	Left or Right	J0638629
40	Gasket, Tappet Cover	All	Side of Engine	J0630305
41	Oil Pump	All		J0804484
42	Gasket, Oil Pan	All		J0639980
43	Gasket, Ventilator	All		630299
44	Gasket, Valve Cover Screw	All	2 Required	51875
45	Gasket, Oil Pump Cover	All		641482
46	Gasket, Oil Pump to Block	All		646147
47	Gasket, Oil Strainer Support	All		630398
48	Gasket, Fuel Pump	All		638737
49	Gasket, Front Engine Plate	All		641096
50	Rear Main Seal Kit	All	Includes 2 Rear Main Seal Halves and 2 Packing	800093K
51	Gasket Set, Exhaust Manifold	All	Includes Center Gasket, Outer Gaskets, and Down-pipe Gasket	J0801345
52	Gasket Set, Valve Grind	All	Includes 3, 21, 39, 43, 50	801344
53	Gasket Set, Overhaul	All Except M38-A1	Includes 3, 17, 21, 39, 41, 43, 44, 45, 46, 48, 49, 50	810585

Copyright © 2014 Crown Automotive Sales Co., Inc. All rights reserved.

3.8L (S6-232) & 4.2L (S6-258) Engines

3.8L (S6-232): 1965-1979 CJ-5, 6, 7, SJ, J-Series
4.2L (S6-258): 1971-1986 CJ-5, 6, 7, 8, Cl04 Commando, SJ, J-Series

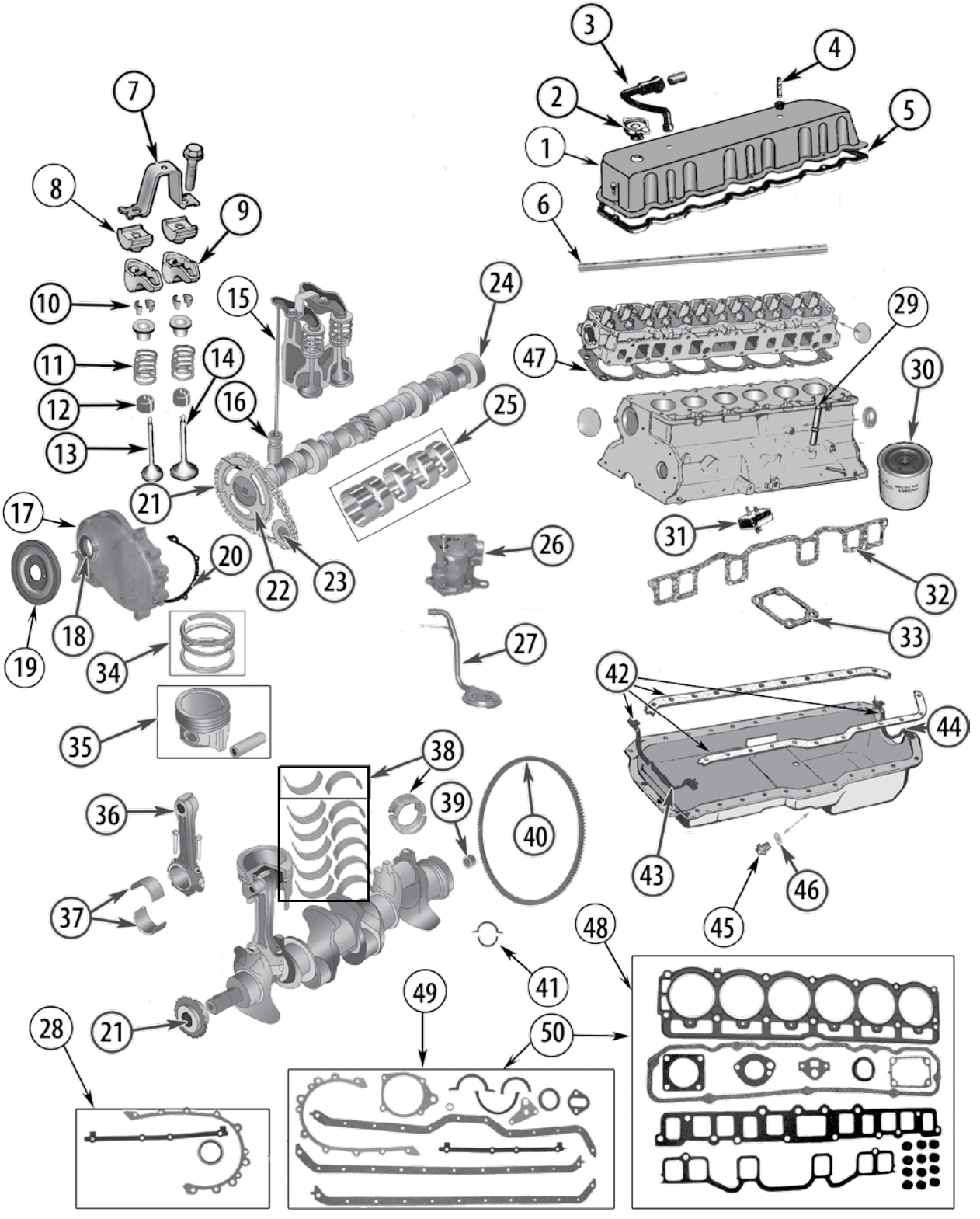

Copyright © 2014 Crown Automotive Sales Co., Inc. All rights reserved.

3.8L (S6-232) & 4.2L (S6-258) Engines

Item #	Description	Years	Application	Comments	Replaces Part #
1	Cover, Valve	1981-86	CJ-5, 7, 8, SJ, J-Series	Plastic Cover Aluminum, Unpainted Aluminum, Painted Black	83501398 83501398AL 83501398ALB
2	Hose, Valve Cover to Air Cleaner	1971-75	All		J3190565
3	Cap, Oil Filler	1965-79 1981-86	All All	Twist-on Twist-on	J8132312 33001016
4	P.C.V. Valve	1972-74 1975 1975 1976-77 1978-80 1981 1982 1983-86 1972-73 1965-75 1976-77 1978-80 1981-86	CJ-5, 6 CJ-5, 6 w/ Manual Trans. w/ Calif. Emissions CJ-5, 6 w/ Automatic Transmission CJ-5, 7 CJ-5, 7 CJ-5, 7, 8 CJ-5, 7, 8 CJ-5, 7, 8 C104 Commando SJ, J-Series SJ, J-Series SJ, J-Series SJ, J-Series	2 Outlets 1 Outlet	J3211538 J3211538 J3211538 J3230351 J3236680 J3240359 J3241629 33000887 J3211538 J3211538 J3230351 J3236680 33000887
5	Gasket, Valve Cover	1965-80 1981-86	All All		J8126762 J8053050
6	Shaft, Rocker Arm	1966-74	All	w/ Shaft Rocker Arms	J8125322
7	Bridge, Rocker Arm Pivot	1980-86 1981-86	All w/o VAM Engine[1] All w/o VAM Engine[1]	2-Piece Style w/o Valve Cover Stud 2-Piece Style w/ Valve Cover Stud	J3236513 J3237851
8	Pivot, Rocker Arm	1972-79 1980-86	All All	Aluminum; 1-Piece Style Steel; 2-Piece Style	J3210178 J3235090
9	Rocker Arm	1974-82 1983-86	All All	w/ Pivot Rocker Arms	J3223888 J3242393
10	Lock, Valve Spring Retainer	1965-66 1967-71 1965-71 1972 1972 1972 1973 1974-77 1974-80 1981-86 1981-86	All All All All w/ Shaft Rocker Arms All w/ Shaft Rocker Arms All w/ Pivot Rocker Arms All w/ Pivot Rocker Arms All w/ Valve Rotators All w/o Valve Rotators All w/o VAM Engine[1] All w/ VAM Engine[1]	Intake Intake Exhaust Intake Exhaust Intake or Exhaust Intake or Exhaust Exhaust Intake or Exhaust Intake or Exhaust Intake or Exhaust	J3156157 J3180458 J3156157 J3180458 J3156157 J3180458 J3156157 J8123287 J3156157 J3180458 J3156157
11	Spring, Valve	1977-86	All w/o VAM Engine[1]	Intake or Exhaust	J3228192
12	Seal, Valve	1965-86 1965-86	All All	Standard or .003" Oversized .015" Oversized	J3218976 J3218977
13	Valve, Intake	1965-66 1973-80 1981-86 1981-86 1981-86	All All All w/o VAM Engine[1] All w/o VAM Engine[1] All w/o VAM Engine[1]	Standard Standard Standard .003" .015"	J3218732 J3218732 J3240768 J3240166 J3240167
14	Valve, Exhaust	1973 1974-80 1981-86 1981-86	All All w/o Valve Rotators All w/o VAM Engine[1] All w/o VAM Engine[1]	Standard Standard Standard .015"	J3224597 J3224597 J3240767 J3240164

[1] = AMC Assembly Plant in Mexico

Continued on Next Page

Copyright © 2014 Crown Automotive Sales Co., Inc. All rights reserved.

3.8L (S6-232) & 4.2L (S6-258) Engines

(Continued)

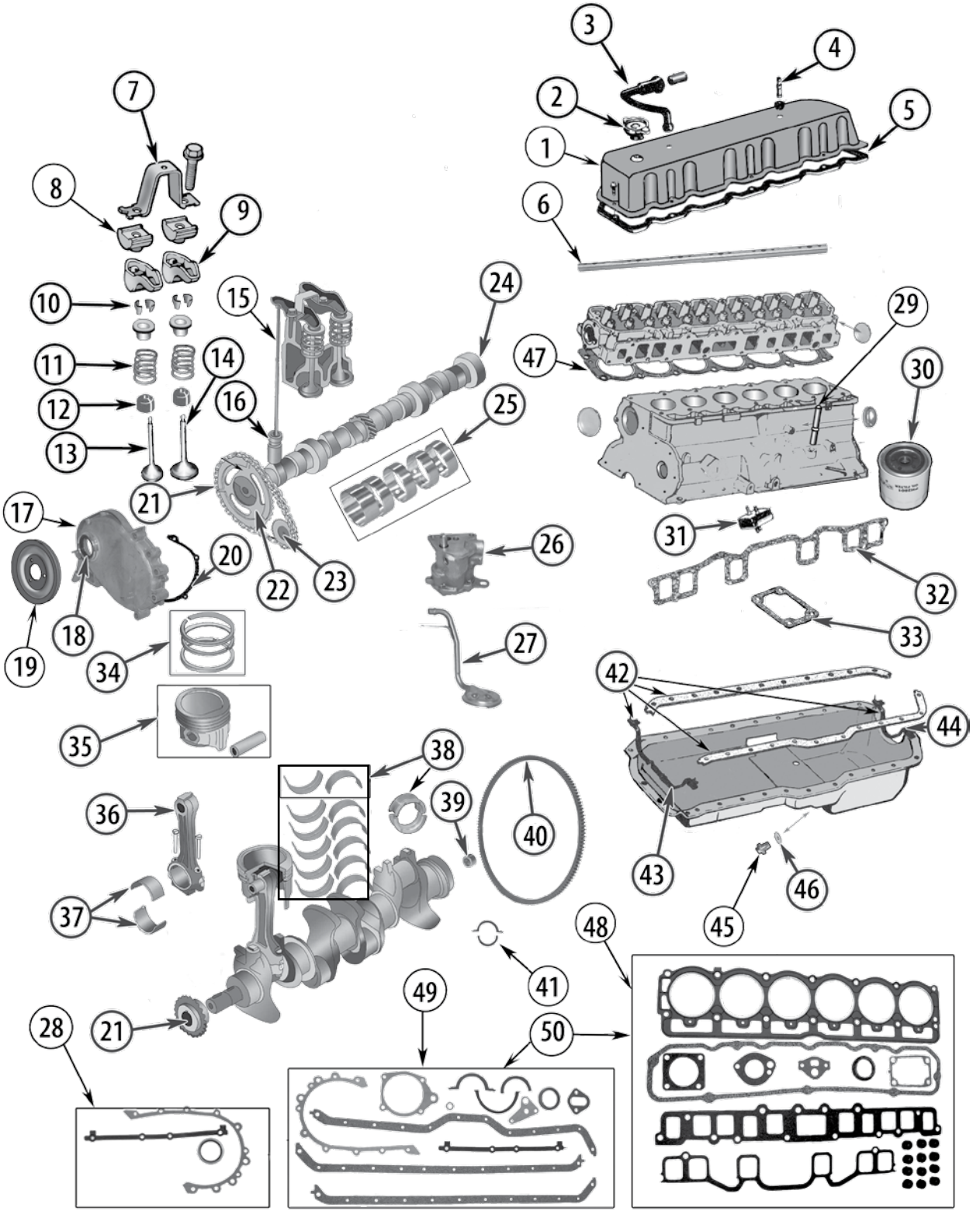

Copyright © 2014 Crown Automotive Sales Co., Inc. All rights reserved.

3.8L (S6-232) & 4.2L (S6-258) Engines (Continued)

Item #	Description	Years	Application	Comments	Replaces Part #
15	Push Rod, Valve	1971 1972 1972 1971 1973 1974 1974 1975-76 1977 1977-80 1981-86	All CJ-5, 6, 101 Commando SJ, J-Series SJ, J-Series All All All All All All All w/o VAM Engine[1]	8.5:1 Compression Ratio 8:1 Compression Ratio w/ Shaft Rocker Arms 8:1 Compression Ratio w/ Pivot Rocker Arms 8.5:1 Compression Ratio w/ Shaft Rocker Arms 8.1:1 Compression Ratio w/ Shaft Rocker Arms w/ Pivot Rocker Arms Temperature Sending Unit located at front of head Temperature Sending Unit located at rear of head	J3210203 J3210203 J3214013 J3210203 J3214013 J3210203 J3214013 J3214013 J3214013 J3227329 J3242395
16	Tappet, Valve	1965-86	All		J3222276
17	Timing Cover	1975-86	All		53020233
18	Seal, Crankshaft, Front	1965-86	All		J3224704
19	Pulley, Crankshaft	1981-86	All	w/o Factory A/C	J3224690
20	Gasket, Timing Cover	1965-86	All		J3225187
21	Chain, Timing	1965-86	All		J3240502
22	Sprocket, Camshaft	1965-86	All		J3206693
23	Sprocket, Crankshaft	1965-86	All		33004107
24	Camshaft	1965-80 1981-86	All All w/o VAM Engine[1]		J8132907 J8133009
25	Bearing Set, Camshaft	1965-86 1965-86	All All	Standard; Set of 4 .010"; Set of 4	J3205711 J3208985
26	Oil Pump	1965-80 1981-86	All All	Includes Inlet Tube & Gasket Includes Inlet Tube & Gasket	J3181340 J3242141
27	Pick Up, Oil Pump	1965-80	All		J3181471
28	Gasket Set, Timing Case Cover	1965-86	All	Includes 17, 18, and 40	J8129097
29	Dipstick Tube	1974-82	All		J3176846
30	Oil Filter	1965-82 1983-86	All All		J8993146 J3242397
31	Mount, Engine	1965-71 1971-76 1977 1977 1978-86	All All All All All	Left or Right Left or Right Left or Right; Top & bottom plates not interlocked Left or Right; Top & bottom plates interlocked Left or Right	J0939993 J3173681 J3173681 J8128488 J8128488
32	Gasket, Intake & Exhaust Manifold	1965-86	All	Steel	J3242855
33	Gasket, Intake Manifold to Exhaust Manifold	1965-79	All		J3184277
34	Ring Set, Piston	1965-86 1965-86	All All	Standard; 1 Required .010"; 1 Required	J8121683 J8121684
35	Piston	1968-70 1979-86	All All	Standard Standard	J8127654 J8134441

[1] = AMC Assembly Plant in Mexico

Continued on Next Page

Copyright © 2014 Crown Automotive Sales Co., Inc. All rights reserved.

3.8L (S6-232) & 4.2L (S6-258) Engines

(Continued)

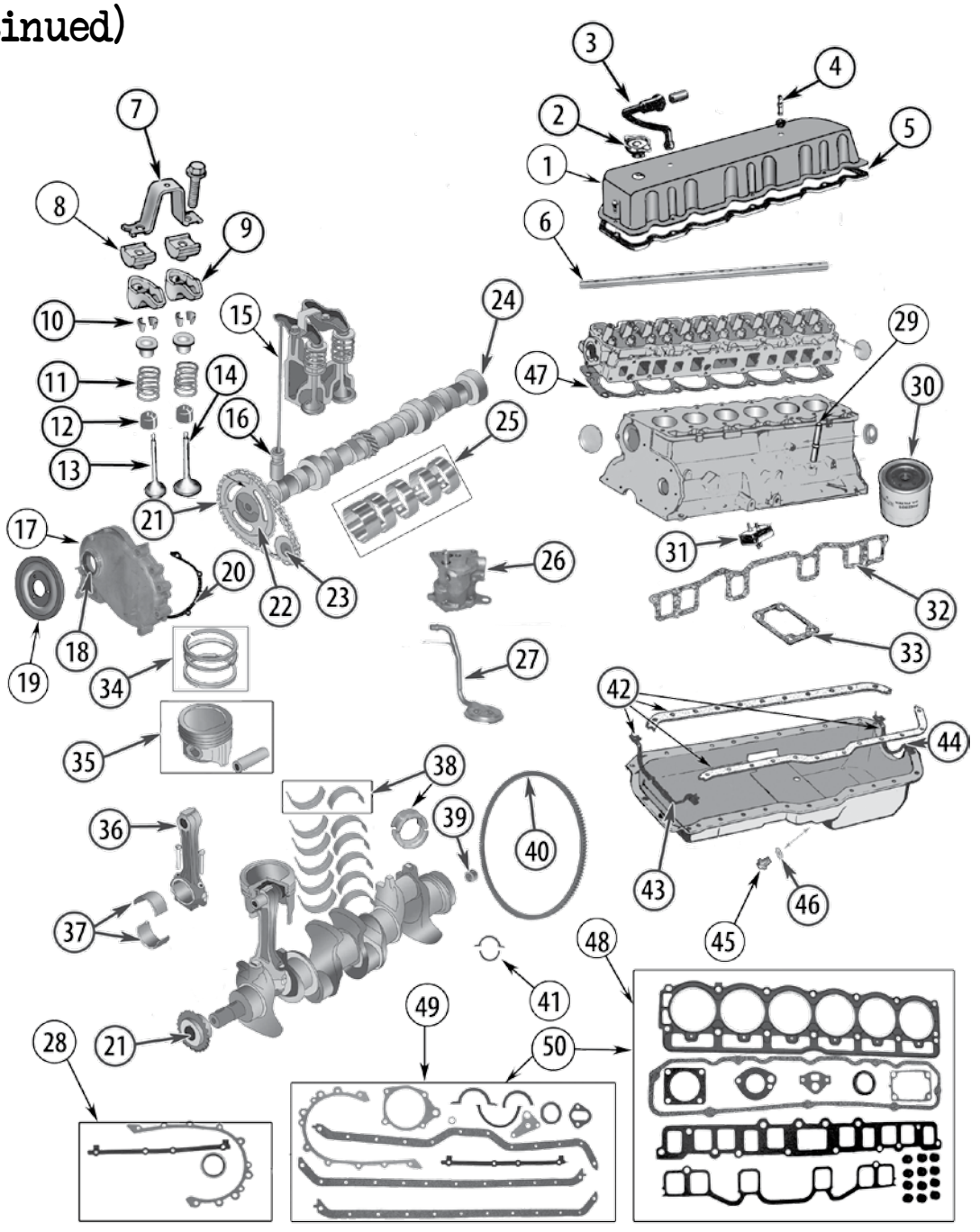

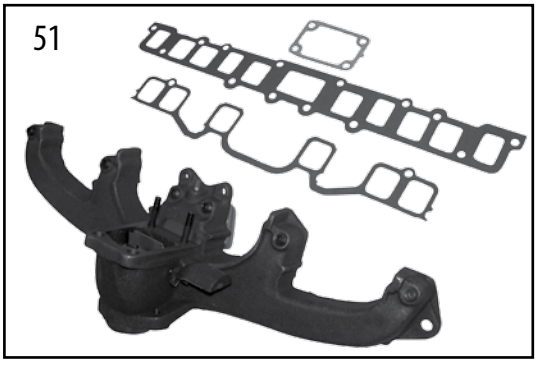

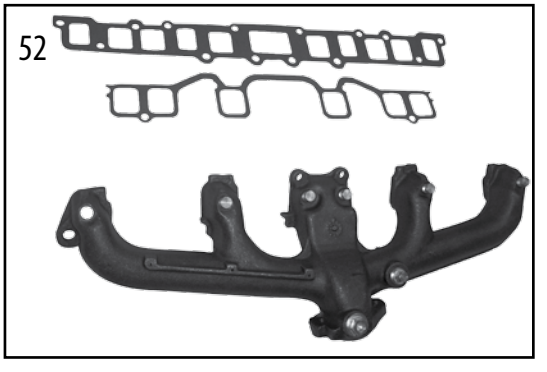

Copyright © 2014 Crown Automotive Sales Co., Inc. All rights reserved.

3.8L (S6-232) & 4.2L (S6-258) Engines (Continued)

Item #	Description	Years	Application	Comments	Replaces Part #
36	Rod, Connecting	1965-70 1965-71 1972-79 1971-86	All 3.8L (6-232) After engine build code #710-L-21 & before 307-E-20 All 3.8L (6-232) After engine build code #307-E-20 All 3.8L (6-232) All 4.2L (6-258)		J3237812 J3173210 J3173210 J3237812
37	Bearing Set, Connecting Rod	1970-86 1970-86	All All	Standard; Set of 6 .010"; Set of 6	83500300K6 83500301K6
38	Bearing Set, Crankshaft Main, #1, 2, 4, 5, 6, 7	1965-86 1965-86	All All	Standard; Full Set .010"; Full Set	8133252K6 8133254K6
39	Bushing, Crankshaft Pilot	1965-71 1972-75 1972-79 1976-79 1980-86	All w/ Manual Transmission CJ-5, 6, C104 Commando SJ, J-Series CJ-5, 7 All	.753" ID 1.061" OD .747" Length .750" ID 1.057" OD .876" Length .750" ID 1.061" OD .876" Length .678" ID 1.061" OD .627" Length .601" ID 1.061" OD .627" Length	J3174730 J3213751 J3213751 J3222723 J3236726
40	Ring Gear, Flyweel	1965-71 1972-86	All All		J3172419 J3179741
41	Seal Kit, Crankshaft Rear	1965-86	All		4778126
42	Gasket, Oil Pan	1965-86 1965-86	All All	4-Piece 1-Piece	83504662 53007568
43	Seal, Oil Pan to Timing Cover	1965-86	All		J3172848
44	Seal, Oil Pan to Rear Main Bearing Cap	1965-86	All		J3177635
45	Plug, Oil Drain	1965-86	All	1/2"-20	J3206696
46	Gasket, Oil Drain Plug	1965-86 1965-83	All All	Aluminum Copper	J3170271 J3243136
47	Gasket, Cylinder Head	1965-86	All		J3237756
48	Gasket Set, Upper	1971-85 1986	All All		J8128190 83502384
49	Gasket Set, Lower	1975-86	All		J8125722
50	Overhaul Kit	1971-72 1973-85 1986-86	All All All	w/ High Compression	J8128190 J8128190 J8124691
51	Exhaust Manifold Kit	1972-79	All	Includes Manifold & Gaskets	8124999K
52	Exhaust Manifold Kit	1981-86	All	Includes Manifold & Gaskets	3237427K

1 = AMC Assembly Plant in Mexico

Copyright © 2014 Crown Automotive Sales Co., Inc. All rights reserved.

AMC V8 Engines

5.0L (V8-304) 1971-1981 CJ-5, 6, 7, 8 C104 Commando
5.9L (V8-360) 1970-1991 SJ, J-Series
6.6L (V8-401) 1971-1979 SJ, J-Series

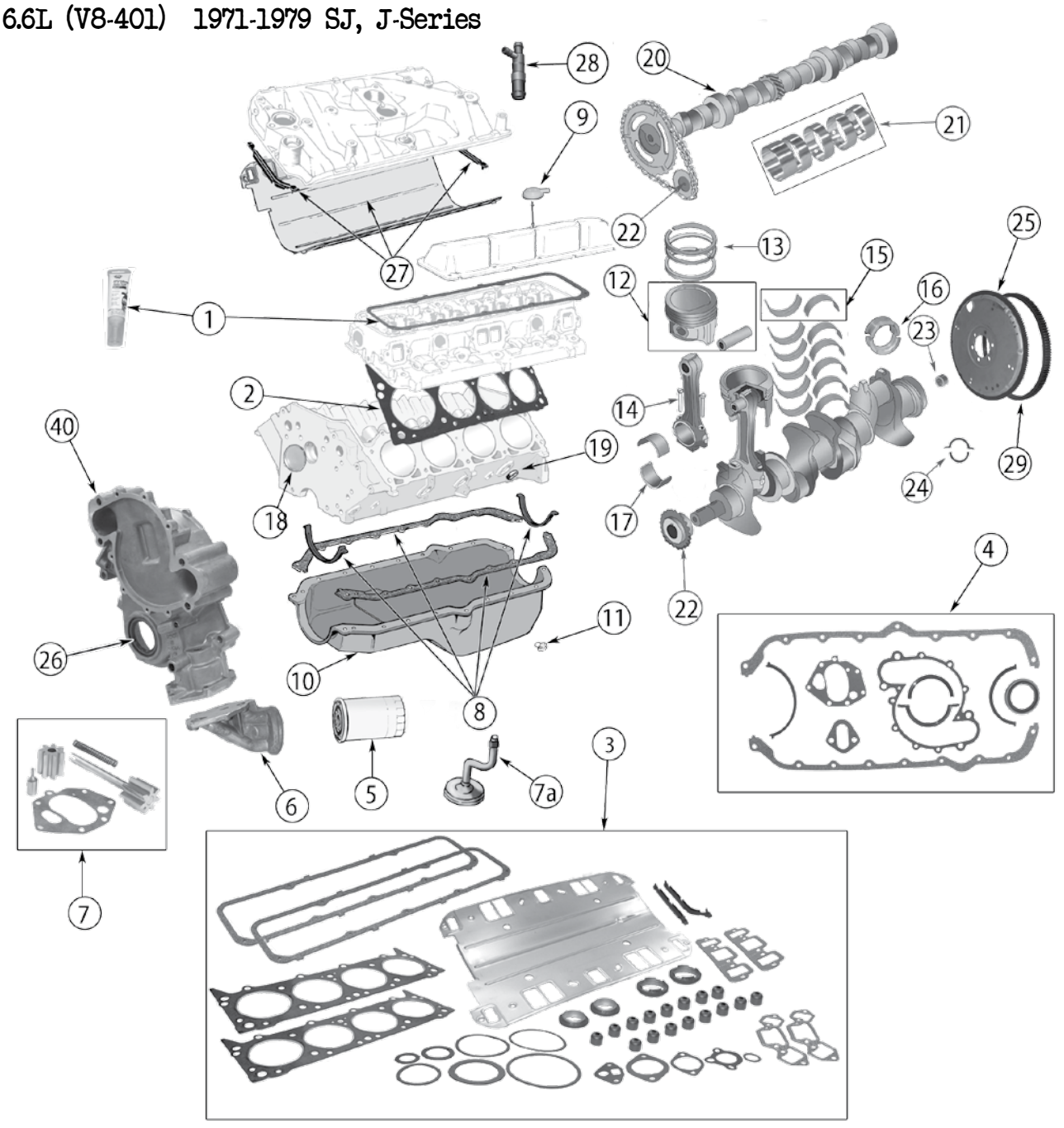

Item #	Description	Years	Engine	Comments	Replaces Part #
1	Gasket, Valve Cover	1970-80 1981-91	5.0L, 5.9L, 6.6L 5.0L, 5.9L	Cork Use RTV Silicone	J3181291 J8993317
2	Gasket, Cylinder Head	1971-81 1970-91	5.0L 5.9L, 6.6L		J3197636 J3227352
3	Gasket Set, Upper	1971-81 1973-91	5.0L 5.9L, 6.6L		J8128191 J8128192
4	Gasket Set, Lower	1970-91	5.0L, 5.9L, 6.6L		J8125727

Copyright © 2014 Crown Automotive Sales Co., Inc. All rights reserved.

AMC V8 Engines

Item #	Description	Years	Engine	Comments	Replaces Part #
5	Filter, Engine Oil	1972-81 1972-82 1983-86 1987-90 1991	5.0L 5.9L, 6.6L 5.9L 5.9L 5.9L	 w/ SAE Threads w/ Metric Threads	J8993146 J8993146 J3242397 33004195 5281090
6	Cover, Oil Pump	1970-86 1987-91	5.0L, 5.9L, 6.6L 5.9L		J3226242 33003536
7	Repair Kit, Oil Pump	1970-91	5.0L, 5.9L, 6.6L	Includes Gear, Shaft, Plunger, Spring, and Gasket	3184086K
7A	Tube & Screen, Oil Pickup	1970-91	5.0L, 5.9L, 6.6L		J3216049
8	Gasket Set, Oil Pan	1970-91	5.0L, 5.9L, 6.6L	Cork & Rubber Set; 4 Pieces	J3206690
9	Cap, Oil Filler	1970-91	5.0L, 5.9L, 6.6L		J3220248
10	Oil Pan	1970-91	5.0L, 5.9L, 6.6L		J3236322
11	Plug, Oil Pan	1970-91	5.0L, 5.9L, 6.6L	1/2"-20	J3206696
12	Piston & Pin	1971-81	5.0L	Standard; 8 Required	J4487564
13	Ring Set	1971-81 1970-91 1970-91	5.0L 5.9L 5.9L	Standard; For 8 Pistons Standard; For 8 Pistons .010"; For 8 Pistons	J8121685 J3208066 J3208067
14	Bolt, Connecting Rod	1970-91	5.0L, 5.9L, 6.6L	Includes Nut	J4486626
15	Main bearing, Crankshaft	1970-91	5.0L, 5.9L, 6.6L	Standard; 4 Required	J8125928*
16	Thrust Bearing, Crankshaft	1970-91	5.0L, 5.9L, 6.6L	Standard; 1 Required	J8125933*
17	Bearing, Connecting Rod	1970-91 1970-91	5.0L, 5.9L 5.0L, 5.9L	Standard; 8 Required .010"; 8 Required	83500300 83500301
18	Plug, Camshaft	1970-91	5.0L, 5.9L, 6.6L	2-9/64" Diameter	J3172313
19	Plug, Expansion	1970-91 1970-91	5.0L, 5.9L, 6.6L 5.0L, 5.9L, 6.6L	1-1/2" Diameter 1" Diameter	J3144641 J3178449
20	Camshaft	1970-91	5.0L, 5.9L, 6.6L		J8121156
21	Bearing Set, Camshaft	1970-91	5.0L, 5.9L, 6.6L	Standard; Set of 5	J4486286
22	Sprocket, Crankshaft	1970-79 1979-91	5.0L, 5.9L, 6.6L 5.0L, 5.9L, 6.6L	w/ 5/8" Wide Chain w/ 1/2" Wide Chain	J3223199 J3234235
23	Bearing, Crankshaft Pilot	1970-71 1972-75 1976-79 1972-79 1980-86	5.0L, 5.9L, 6.6L 5.0L 5.0L 5.9L, 6.6L 5.0L, 5.9L		J3174730 J3213751 J3222723 J3213751 J3236726
24	Seal Kit, Crankshaft Rear	1970-91	5.0L, 5.9L, 6.6L		J3206691
25	Plate, Converter Drive	1975-83 1984-87	5.9L 5.9L	w/ 727 Automatic Transmission	J3232139 J3232139
26	Seal, Crankshaft, Front	1970-91	5.0L, 5.9L, 6.6L		J3193613
27	Gasket & Seal Set, Intake Manifold	1970-91	5.0L, 5.9L, 6.6L		J8125869
28	PCV Valve	1970-78 1979-91	5.0L, 5.9L, 6.6L 5.0L, 5.9L, 6.6L		J3211538 J3234216
29	Ring Gear, Flywheel	1970-86	5.0L, 5.9L, 6.6L		J3179741

*Not Currently Available

Continued on the Next Page

Copyright © 2014 Crown Automotive Sales Co., Inc. All rights reserved.

AMC V8 Engines

(Continued)

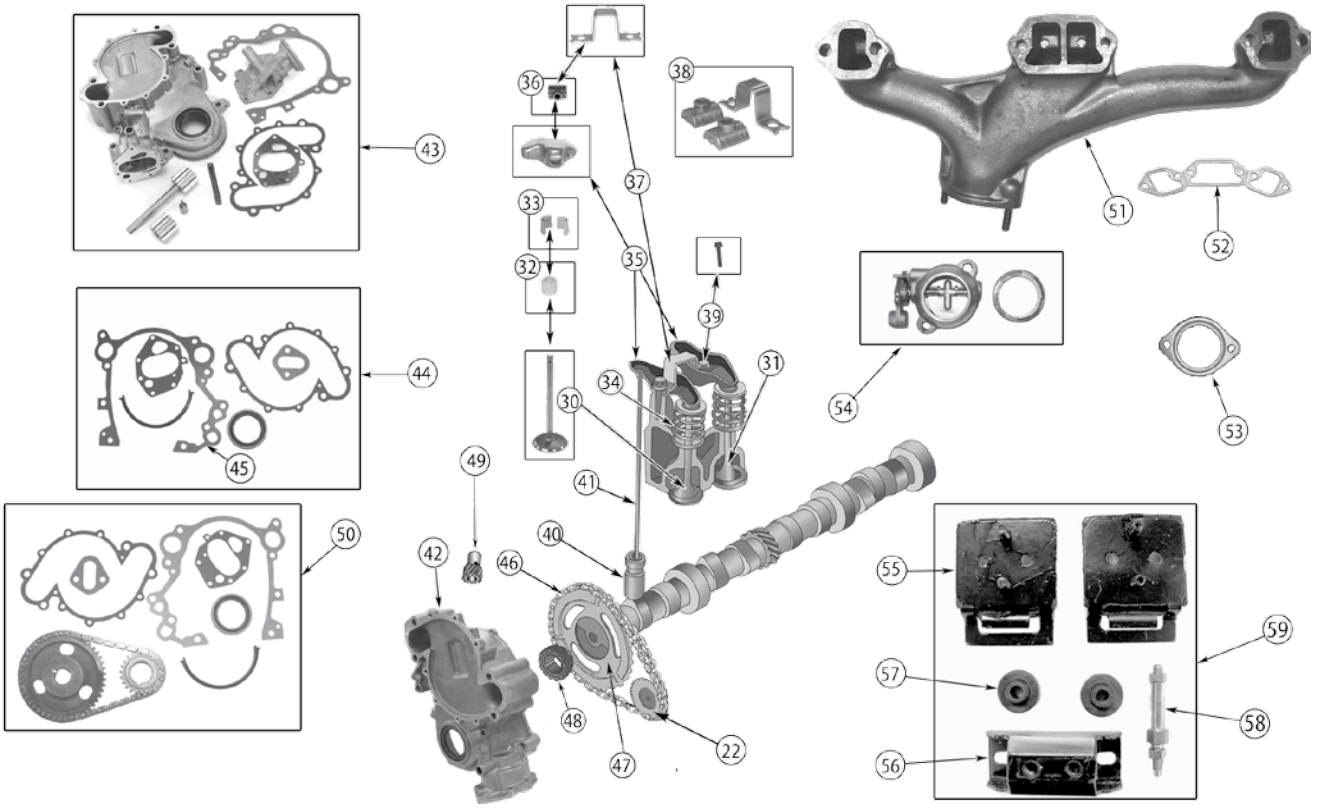

Item #	Description	Years	Engine	Comments	Replaces Part #
30	Valve, Intake	1971-72 1973-80 1973-91 1974-79 1981	5.9L 5.0L 5.9L 6.6L 5.0L	Standard Standard Standard Standard Standard	J3182585 J3218732 J3229657 J3229657 J3240768
31	Valve, Exhaust	1973-80 1973-74 1974 1975-91 1981	5.0L 5.9L 6.6L 5.9L, 6.6L 5.0L	Standard Standard Standard Standard Standard	J3224597 J3218731 J3218731 J3224598 J3240767
32	Seal, Valve	1973-91 1973-91	5.0L, 5.9L, 6.6L 5.0L, 5.9L, 6.6L	Standard or .003” .015”	J3218976 J3218977

Copyright © 2014 Crown Automotive Sales Co., Inc. All rights reserved.

AMC V8 Engines (Continued)

Item #	Description	Years	Engine	Comments	Replaces Part #
33	Lock, Valve Retainer	1971-72 1970-74 1970-74 1973-80 1975-91 1981	5.0L 5.9L, 6.6L 5.9L, 6.6L 5.0L 5.9L, 6.6L 5.0L	 Intake Exhaust	J3180458 J3156157 J8123287 J3156157 J3156157 J3180458
34	Spring, Valve	1970-77 1978-91	5.0L, 5.9L, 6.6L 5.0L, 5.9L, 6.6L		J3213609 J3228192
35	Rocker Arm	1973-81 1974-91	5.0L 5.9L, 6.6L		J3210177 J3210177
36	Pivot, Rocker Arm	1970-79 1980-91	5.0L, 5.9L, 6.6L 5.0L, 5.9L	Aluminum Steel	J3210178 J3235090
37	Bridge, Rocker Arm Pivot	1980-91	5.0L, 5.9L		J3236513
38	Rocker Arm Pivot Kit	1980-91	5.0L, 5.9L	Includes 2 Steel Pivots and 1 Bridge	3236513K
39	Bolt, Rocker Arm Pivot	1970-91	5.0L, 5.9L, 6.6L		J8120512
40	Tappet (Lifter)	1970-91	5.0L, 5.9L, 6.6L		J3222276
41	Push Rod	1970-91	5.0L, 5.9L, 6.6L		J3214014
42	Timing Cover	1970-91	5.0L, 5.9L, 6.6L		J8129373
43	Timing Cover Kit	1970-91	5.0L, 5.9L, 6.6L		8129373K
44	Gasket & Seal Kit, Timing	1970-91	5.0L, 5.9L, 6.6L		J8129098
45	Gasket, Timing Cover	1970-91	5.0L, 5.9L, 6.6L		J3180216
46	Chain Timing	1970-79 1979-91	5.0L, 5.9L, 6.6L 5.0L, 5.9L, 6.6L	5/8″Wide 1/2″Wide	J8134343 J3234433
47	Sprocket, Camshaft	1970-79 1979-91	5.0L, 5.9L, 6.6L 5.0L, 5.9L, 6.6L	w/ 5/8″Wide Chain w/ 1/2″Wide Chain	J3197138 J3234234
48	Gear, Camshaft	1970-91	5.0L, 5.9L, 6.6L		J4486635
49	Gear, Distributor	1970-91	5.0L, 5.9L, 6.6L		J3208615
50	Kit, Timing	1971-79 1979-91	5.0L, 5.9L, 6.6L 5.0L, 5.9L, 6.6L	w/ 5/8″Wide Sprockets w/ 1/2″Wide Sprockets	3185270K 3234433K
51	Manifold, Exhaust	1972-79 1972-91 1980-81	5.0L, 5.9L, 6.6L 5.0L, 5.9L, 6.6L 5.0L	Left Right Left	J8122442 J8121274 J8122442
52	Gasket, Exhaust Manifold to Cylinder Head	1970-91	5.0L, 5.9L, 6.6L	Left or Right	J3237270
53	Gasket, Exhaust Manifold to Damper	1975-91	5.0L, 5.9L, 6.6L		J5353073
54	Damper Kit, Exhaust	1975-91	5.0L, 5.9L, 6.6L		J3238998
55	Mount, Engine	1970-91	5.0L, 5.9L, 6.6L	Left or Right	J3186107
56	Mount, Transmission	1970-91	5.0L, 5.9L, 6.6L		J1370910
57	Insulator, Transmission	1976-91	5.0L, 5.9L, 6.6L		J0945266
58	Stud, Insulator	1976-91	5.0L, 5.9L, 6.6L		J5358879
59	Mount Kit	1976-91	5.0L, 5.9L, 6.6L		3186107K

Copyright © 2014 Crown Automotive Sales Co., Inc. All rights reserved.

GM 2.5L (4-151) Engine

1980-1983 CJ-5, 7, 8

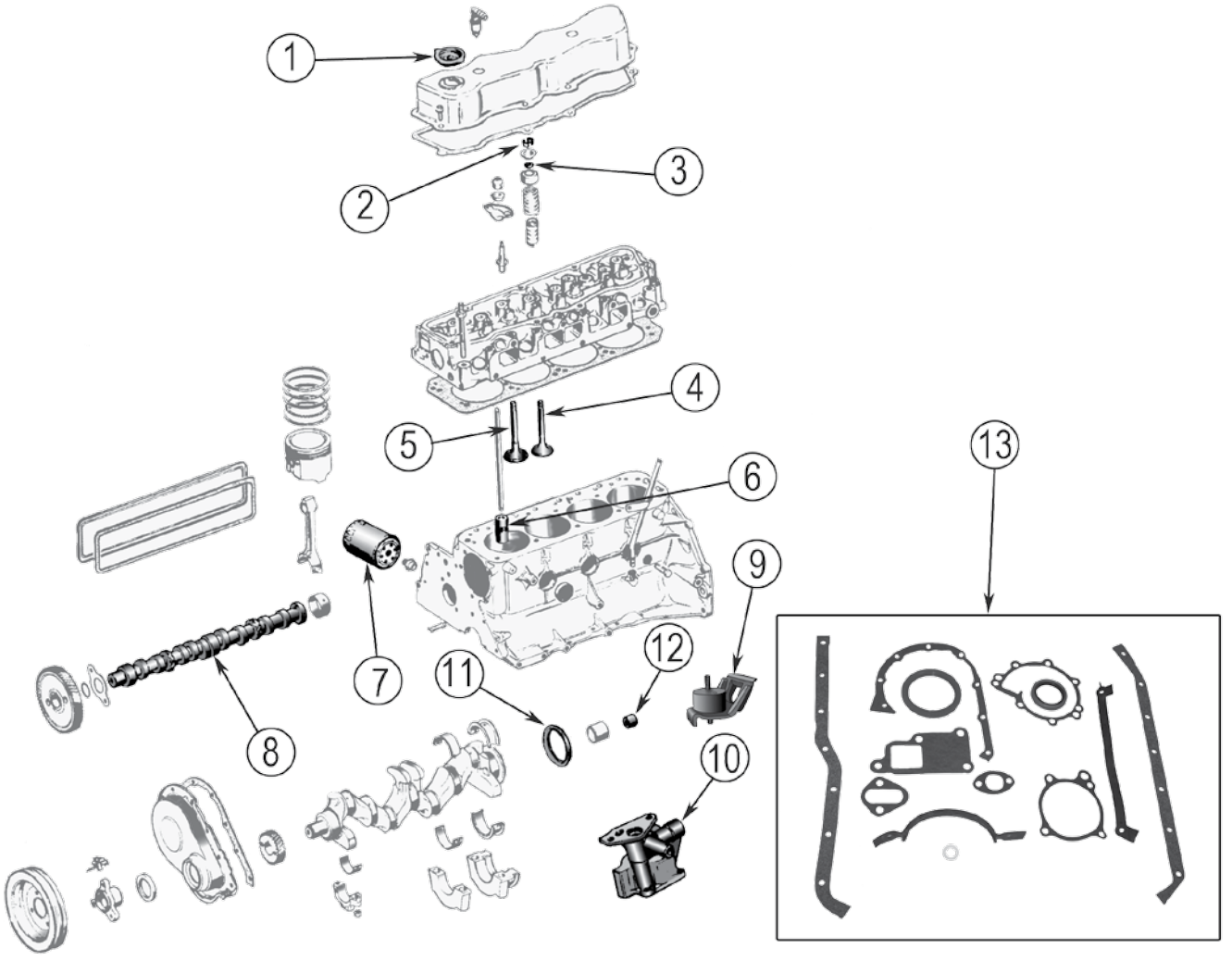

Copyright © 2014 Crown Automotive Sales Co., Inc. All rights reserved.

GM 2.5L (4-151) Engine

Item #	Description	Comments	Replaces Part #
1	Cap, Oil Filler		J8132312
2	Lock, Valve	2 Required Per Valve	J8123287
3	Seal, Valve	Intake or Exhaust	J8132233
4	Valve, Intake	Standard	J8132227
5	Valve, Exhaust	Standard	J8132229
6	Tappet (Lifter)		J8136656
7	Filter, Engine Oil		J8132313
8	Camshaft		J8132249
9	Mount, Engine	Left or Right	J5361829
10	Pump, Engine Oil		J8132303
11	Seal, Crankshaft, Rear		33004143
12	Bushing, Crankshaft Pilot		J3752487
13	Gasket Set, Lower		J8132202
14	Gasket Set, Upper	No Image Available	J8132203

Copyright © 2014 Crown Automotive Sales Co., Inc. All rights reserved.

AMC 2.5L (4-150) Engine

1983-1986 CJ-5, 7, 8

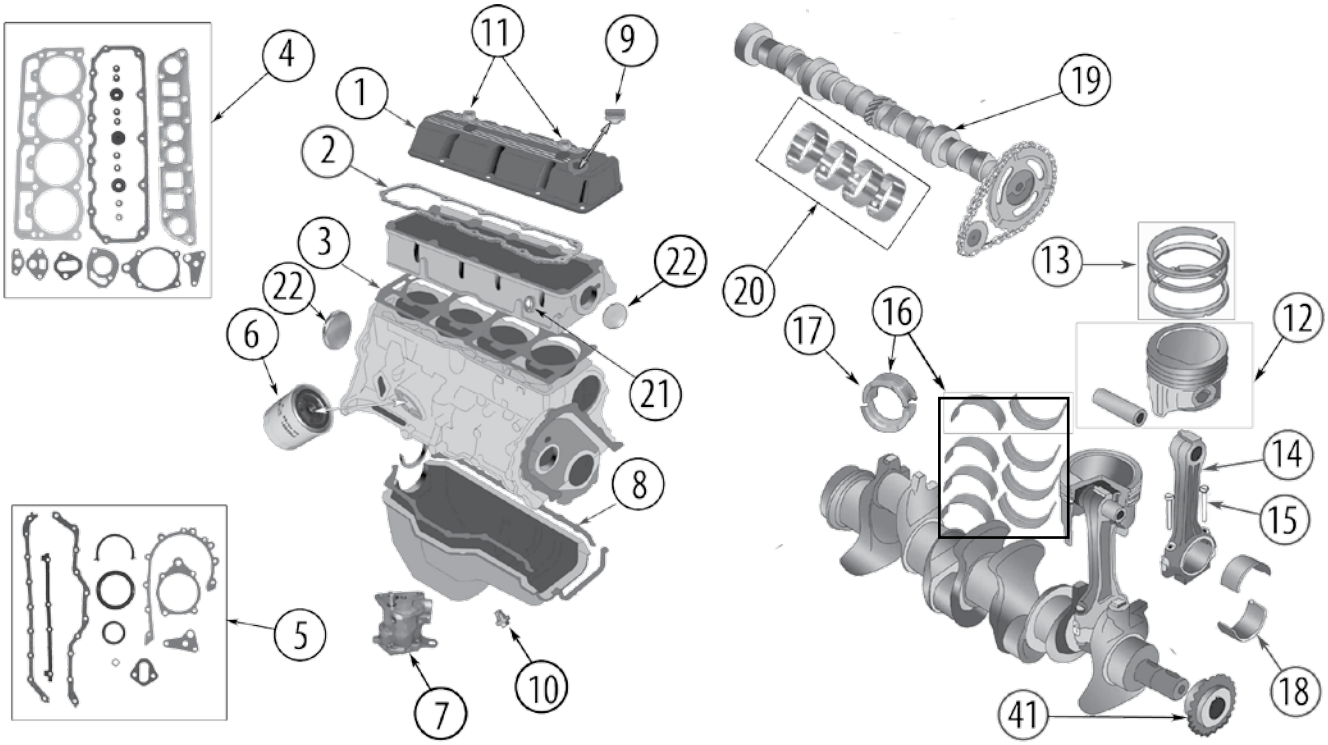

Copyright © 2014 Crown Automotive Sales Co., Inc. All rights reserved.

AMC 2.5L (4-150) Engine

Item #	Description	Comments	Replaces Part #
1	Valve Cover		33003857
2	Gasket, Valve Cover		J3241731
3	Gasket, Cylinder Head		53009549
4	Gasket Set, Upper		83504346
5	Gasket Set, Lower		83504647
6	Filter, Engine Oil		J8132313
7	Pump, Oil	1983-85; Tube Not Included 1986	J3241399 J3243102
8	Gasket, Oil Pan	4-Piece Cork & Rubber 1-Piece	83504661 4713021
9	Cap, Oil Filler		33001016
10	Plug, Oil Pan		83501425
11	Grommet, Valve Cover	.72″ ID .45″ ID	J8134400 33001237
12	Piston & Pin	Standard; 4 Required .010″; 4 Required	83500251 83500252
13	Ring Set, Piston	Standard; 4 Required	83500210
14	Rod, Connecting		53020126
15	Bolt, Connecting Rod	Includes Nut	J4486626
16	Bearing Set, Crankshaft Main	Standard; Set of 4	8133252K4
17	Thrust Bearing, Crankshaft	Standard; 1 Required	J8133253
18	Bearing, Connecting Rod Set	Standard; Set of 4 .010″; Set of 4	83500300K4 83500301K4
19	Camshaft		83500249
20	Bearing Set, Camshaft	Standard; Set of 4 .010″; Set of 4	J3205711 J3208985
21	Plug, Expansion	7/8″ Diameter	J3172319
22	Plug, Expansion	2″ Diameter	J3105394

Continued on the Next Page

Copyright © 2014 Crown Automotive Sales Co., Inc. All rights reserved.

AMC 2.5L (4-150) Engine

(Continued)

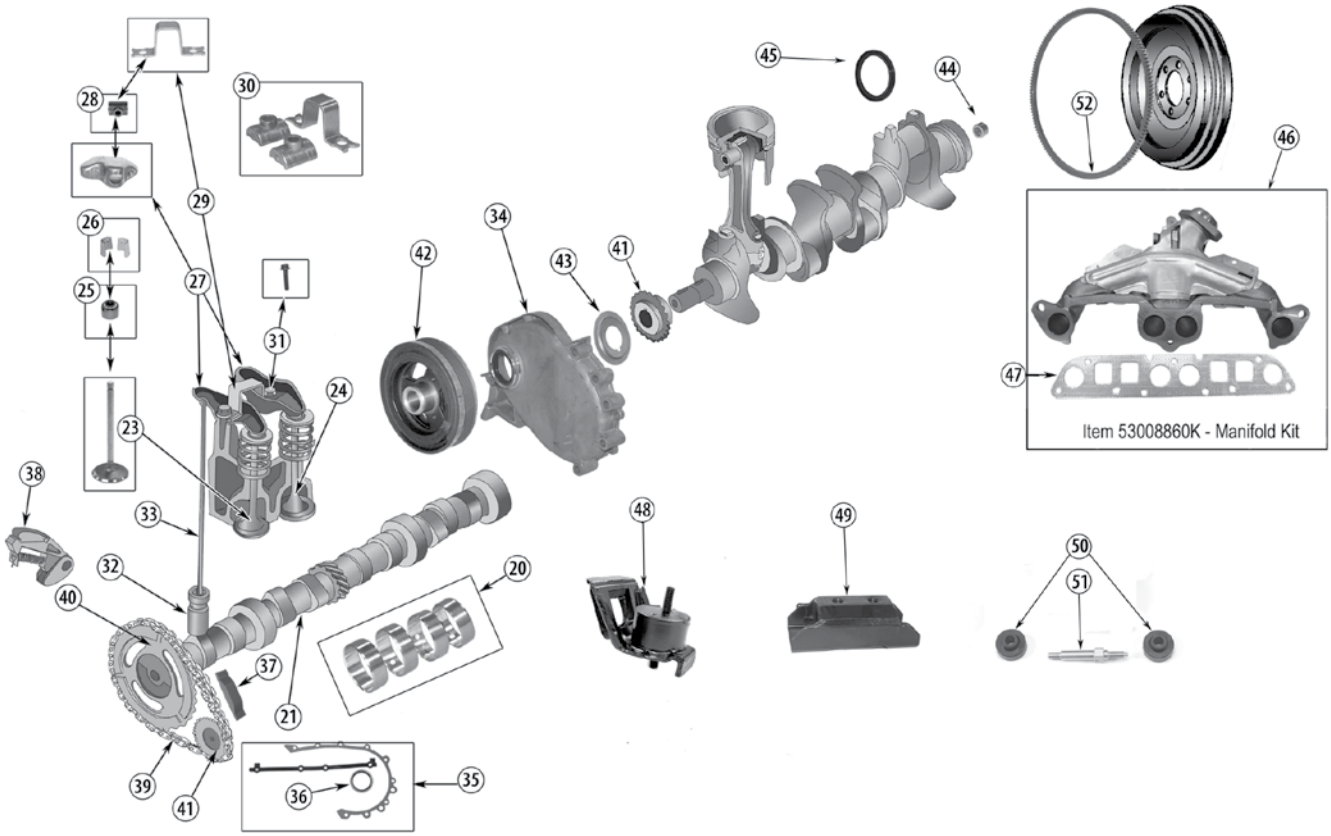

Item #	Description	Comments	Replaces Part #
23	Valve, Intake	Standard	J3242659
24	Valve, Exhaust	Standard	33002429
25	Seal, Valve Stem	Intake; Standard Exhaust; Standard	53009886 53009887
26	Lock, Valve Retainer	2 Required Per Valve	J3242664

Copyright © 2014 Crown Automotive Sales Co., Inc. All rights reserved.

AMC 2.5L (4-150) Engine (Continued)

Item #	Description	Comments	Replaces Part #
27	Rocker Arm		J3242393
28	Pivot, Rocker Arm		J3235090
29	Bridge, Rocker arm Pivot		J3236513
30	Pivot Kit	Includes 1 Pivots & 1 Bridge	3236513K
31	Bolt, Rocker Arm Pivot		J8120512
32	Tappet (Lifter)		J3222276
33	Push Rod		J3241709
34	Timing Cover		53020233
35	Gasket & Seal Kit, Timing		J8129097
36	Seal, Crankshaft, Front		33004681
37	Guide, Timing Chain		33003446
38	Tensioner, Timing Chain		33003421
39	Chain, Timing		J3242300
40	Sprocket, Camshaft		J3242280
41	Sprocket, Crankshaft		33004020
42	Damper, Crankshaft	w/ Serpentine Belt Drive	J3242886
43	Slinger, Front Crankshaft Oil		J3173076
44	Bearing, Crankshaft Pilot	w/ Manual Transmission	J3250005
45	Seal, Crankshaft, Rear		33004143
46	Manifold Kit, Exhaust	Includes Manifold w/ Heat Shield, Manifold Gasket, EGR Block-Off Plate & EGR Gasket	53008860K
47	Gasket, Intake & Exhaust Manifold		53020112
48	Mount, Engine	Left or Right	J5361829
49	Mount, Transmission		J1370910
50	Insulator, Transmission		J0945266
51	Insulator Stud, Transmission		J5358879
52	Ring Gear, Flywheel		J3241718

Copyright © 2014 Crown Automotive Sales Co., Inc. All rights reserved.

Miscellaneous Engine Components

S6-226 Super Hurricane Engine

1957-1964 FC-170
1954-1962 Willys Pickup
1954-1963 Willys Sedan Delivery
1954-1964 Willys Station Wagon

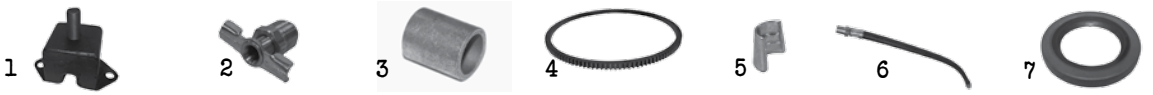

Item #	Description	Comments	Replaces Part #
1	Mount, Engine	Left or Right	J8136614
2	Draincock, Engine		JA001126
3	Bushing, Crankshaft Pilot		J0729521
4	Ring Gear, Flywheel	130 Teeth	J0733395
5	Lock, Valve Spring		J3242664
6	Hose, Oil Filter	Inlet or Outlet	J0910290
7	Seal, Crankshaft, Front		J0939734
8	Ring Set, Piston	Standard	J0916688 *

*Not Currently Available

V6-225 Buick Dauntless Engine

1966-1971 CJ-5, 6
1966-1971 C101 Commando

1(L) 1(R) 2 3 4 5

Item #	Description	Comments	Replaces Part #
1	Mount, Engine	Left Right	J1371313 J1369788
2	Draincock, Engine		JA001126
3	Bushing, Crankshaft Pilot		J3752487
4	Rocker Arm	Left or Right	J1194143
5	Filter, Engine Oil		J8993146

Copyright © 2014 Crown Automotive Sales Co., Inc. All rights reserved.

Miscellaneous Engine Components

S6-230 Tornado Engine

1962-1965 Willys Pickup
1963-1964 SJ, J-Series

Item #	Description	Comments	Replaces Part #
1	Mount, Engine	Left or Right	J0939993
2	Draincock, Engine		JA001126
3	Ring Gear, Flywheel	158 Teeth	J0930684
4	Gasket, Cylinder Head		J0945519
5	Valve, Exhaust Valve, Intake	Standard Standard	938192 J0936979
6	Lock, Valve Spring		J3242664
7	Seal, Crankshaft, Front		J0939734
8	Sprocket, Camshaft		926157
9	Filter, Engine Oil		J8993146

AMC V8-327 Engine

65/67 SJ, J-Series

Item #	Description	Comments	Replaces Part #
1	Mount, Engine	Left or Right	J3176909
2	Cap, Oil		J3174215
3	Ring Gear, Flywheel	176 Teeth	J3144492
4	Valve, Intake	Standard	J3218732
5	Tappet (Lifter)		J3222276
6	Push Rod		J3161258
7	Chain, Timing		J8134343
8	Sprocket, Crankshaft		J3223199
9	Filter, Engine Oil		J8993146

Copyright © 2014 Crown Automotive Sales Co., Inc. All rights reserved.

Miscellaneous Engine Components

Buick V8-350 Engine

1968-1971 SJ, J-Series

1

2

3

Item #	Description	Comments	Replaces Part #
1	Cap, Oil		J8132312
2	Bushing, Crankshaft Pilot		J3752487
4	Filter, Engine Oil		J8993146

Copyright © 2014 Crown Automotive Sales Co., Inc. All rights reserved.

BRAKE

MB (1941-1945) 8-2
M38 (1950-1952). 8-4
M38-A1 (1952-1963) 8-4
CJ-2A (1945-1949) 8-6
CJ-3A (1948-1953) 8-8
CJ-3B (1953-1968) 8-10
CJ-5 (1955-1983) 8-12
CJ-6 (1955-1975) 8-12
CJ-7 (1976-1986) 8-18
CJ-8 (1976-1986) 8-18
FC-150 (1956-1964) 8-24
FC-170 (1957-1964). 8-24
C101 Commando (1966-1971) 8-26
C104 Commando (1972-1973) 8-26
Willys Pickup (1947-1965) 8-28
Willys Sedan Delivery (1948-1963). 8-28
Willys Station Wagon (1946-1964) 8-28
VJ Jeepster (1948-1950) 8-28
SJ Cherokee, Wagoneer, Grand Wagoneer (1963-1991) 8-30
J-Series Pickups (1963-1988) 8-30

Copyright © 2014 Crown Automotive Sales Co., Inc. All rights reserved.

1941-1945 MB

9" x 1 3/4" Brakes - Eccentric Adjusting Type

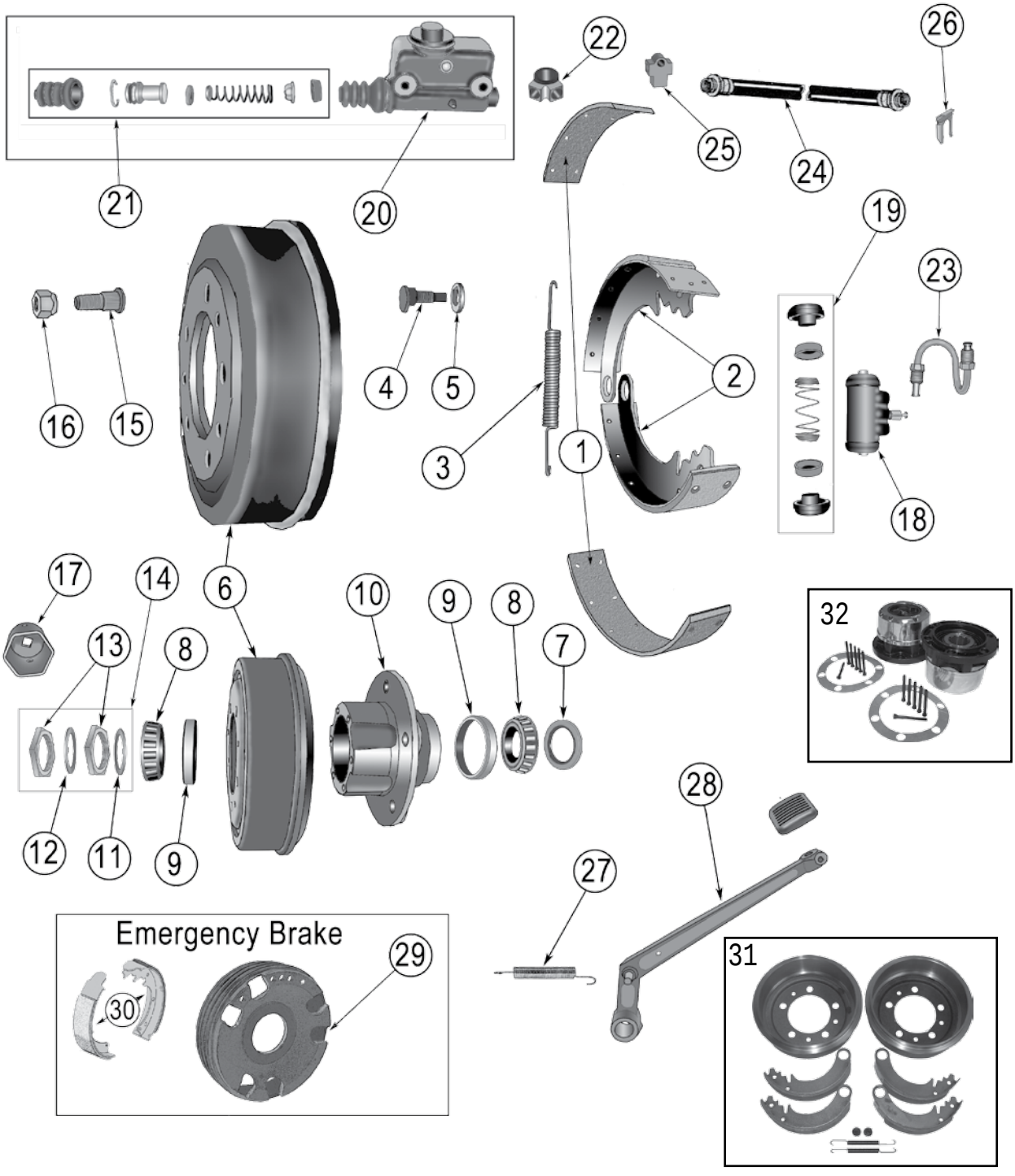

Item #	Decription	Location	Comments	Replaces Part #
FRONT & REAR DRUM BRAKES				
1	Lining Set	Front or Rear	Includes 4 Shoe Linings & 40 Rivets	116600
2	Shoe & Lining Set	Front or Rear		J0642967
3	Spring, Shoe Return	Front or Rear	Upper	J0637905

Copyright © 2014 Crown Automotive Sales Co., Inc. All rights reserved.

1941-1945 MB • 9" x 1 3/4" Brakes - Eccentric Adjusting Type

Item #	Decription	Location	Comments	Replaces Part #
4	Eccentric, Brake Shoe	Front or Rear	2 Required Per Wheel	A754
5	Washer, Brake Shoe Eccentric	Front or Rear	2 Required Per Wheel	637900
6	Drum	Front or Rear	Mounts Inside Hub	A-472*
HUBS, Etc.				
7	Seal, Hub	Front Rear		J0805150 J0805150
8	Bearing, Wheel	Front Inner or Outer		J0052942
9	Cup, Wheel Bearing	Front Inner or Outer Rear Inner or Outer		J0052943 J0052943
10	Hub	Front Rear Inner or Outer		J0909548 J0909548
11	Lock Washer, Wheel Bearing	Front Inner		JA000865
12	Lock Washer, Wheel Bearing	Front Outer		JA000867
13	Nut, Axle Bearing	Front	2 Required Per Wheel	JA000866
14	Axle Nut Kit	Front	Includes #11, 12, & 13	A867K
15	Stud, Hub	Front Front Rear Rear	Left Hand Threads Right Hand Threads Left Hand Threads Right Hand Threads	JA000473 A474 JA000473 A474
16	Wheel Nut	Front or Rear Front or Rear	Right Hand Threads Left Hand Threads; 1/2"-20; 13/16" Hex	JA000476* J0636035
17	Socket, Spindle Nut			A692N
HYDRAULICS				
18	Wheel Cylinder	Front Left or Right Rear Left or Right	1" Bore 3/4" Bore	JA001484 J8126797
19	Repair Kit, Wheel Cylinder	Front Left or Right Rear Left or Right	For 1" Bore Wheel Cylinders For 3/4" Bore Wheel Cylinders	J0115962 J8136601
20	Master Cylinder		1 Hole Threaded, 1 Hole Unthreaded	A556
21	Repair Kit, Master Cylinder			805654
22	Y-Fitting, Master Cylinder			JA000557
HOSES				
23	Tube, Brake	Front	"S"	JA001488
24	Brake Hose	Front Left or Right Front Center Rear Center	6" Long; Axle to Knuckle 11" Long; Frame to Axle 16" Long; Frame to Axle	J0800953 J0800896 J0937884
25	Brake Tee	Front or Rear	Mounts to Axle	J0637432
26	Clip, Brake Hose	Front or Rear		J0637427
MISCELLANEOUS				
27	Spring, Brake Pedal Return		w/ Single Reservoir Master Cylinder	J0641723
28	Brake Pedal Asembly		w/ Single Reservoir Master Cylinder	J0800527*
EMERGENCY BRAKE				
29	Drum, Emergency Brake		w/ Bendix Style Shoes	A9332
30	Shoe Set, Emergency Brake		w/ Bendix Style Shoes	J0643055
CROWN KITS				
31	Drum Service Kit	Front or Rear	Includes Drums, Shoe Set, Linings & Hardware for 2 Wheels	808770KE
32	Manual Locking Hub Set	Front		400501

*Not Currently Available

Copyright © 2014 Crown Automotive Sales Co., Inc. All rights reserved.

1950-1952 M38
1952-1963 M38-A1

9" x 1 3/4" Brakes - Eccentric Adjusting Type

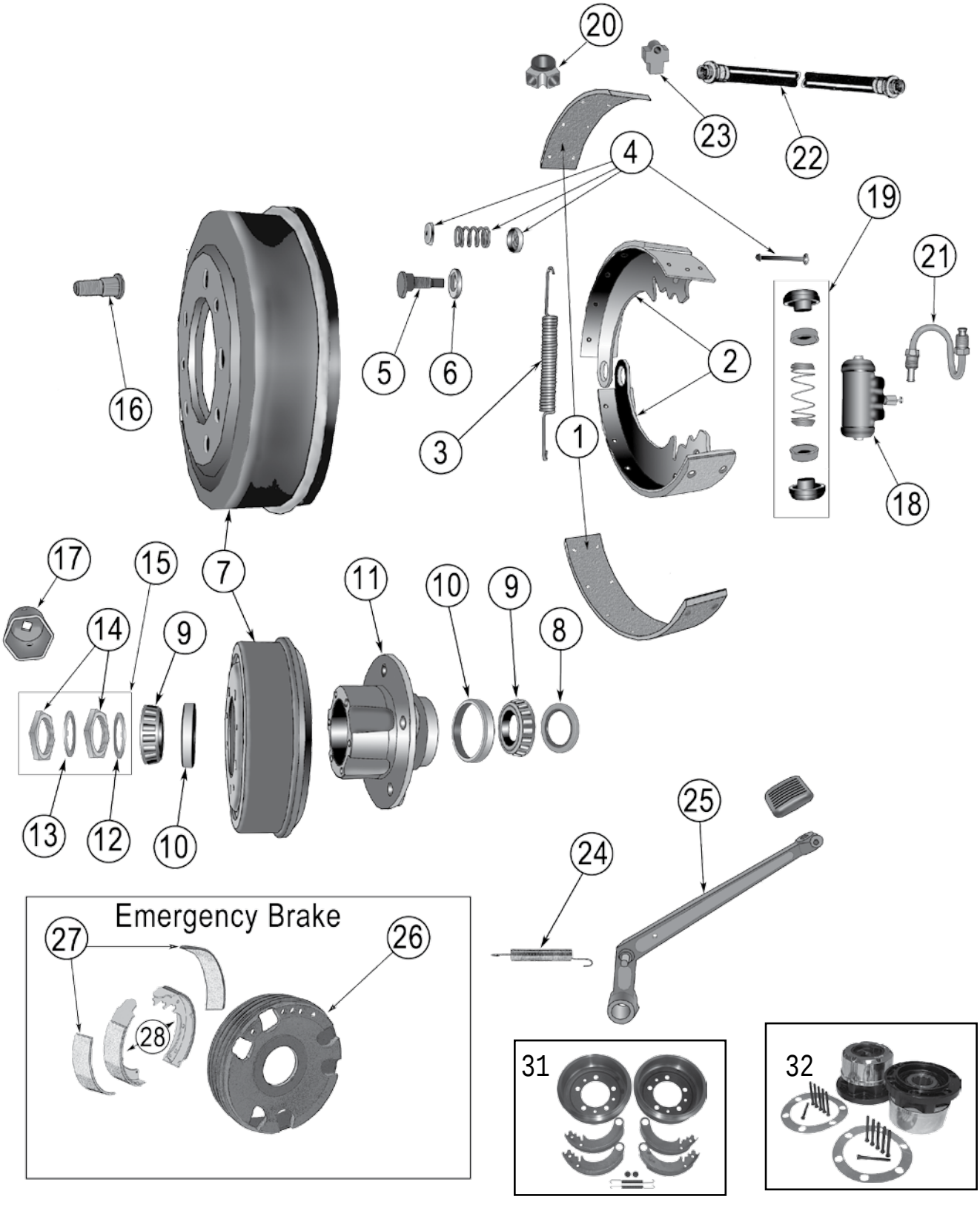

Copyright © 2014 Crown Automotive Sales Co., Inc. All rights reserved.

1950-1952 M38 • 1952-1963 M38-A1

9" x 1 3/4" Brakes - Eccentric Adjusting Type

Item #	Decription	Application	Location	Comments	Replaces Part #
FRONT & REAR DRUM BRAKES					
1	Lining Set	All	Front or Rear	Includes 4 Shoe Linings & 40 Rivets	116600
2	Shoe & Lining Set	M38 M38-A1	Front or Rear Front or Rear		J0642967 J0807376
3	Spring, Shoe Return	M38-A1 All	Front or Rear Front or Rear	Lower Upper	J0805602 J0637905
4	Hold Down Kit, Brake Shoe	M38-A1	Front or Rear	For 1 Wheel	J0120239
5	Eccentric, Brake Shoe	M38 M38-A1	Front or Rear Front or Rear	2 Required Per Wheel 2 Required Per Wheel	A754 J0805592
6	Washer, Brake Shoe Eccentric	All	Front or Rear	2 Required Per Wheel	637900
7	Drum	M38 M38-A1	Front or Rear Front or Rear	Mounts Inside Hub Mounts Outside of Hub	A-472* J0808770
HUBS, Etc.					
8	Seal, Hub	All	Front		J0805150
9	Bearing, Wheel	All	Front Inner or Outer		J0052942
10	Cup, Wheel Bearing	All	Front Inner or Outer		J0052943
11	Hub	All	Front		J0909548
12	Lock Washer, Wheel Bearing	All	Front Inner		JA000865
13	Lock Washer, Wheel Bearing	All	Front Outer		JA000867
14	Nut, Axle Bearing	All	Front	2 Required Per Wheel	JA000866
15	Axle Nut Kit	All	Front	Includes #12, 13, & 14	A867K
16	Stud, Hub	All All	Front or Rear Front or Rear	Left Hand Threads Right Hand Threads	JA000473 J5353025
17	Socket, Spindle Nut	All			A692N
HYDRAULICS					
18	Wheel Cylinder	M38 M38-A1 M38 M38-A1	Front Left or Right Front Left or Right Rear Left or Right Rear Left or Right	1" Bore w/ Straight Hose Connections; 1" Bore 3/4" Bore 3/4" Bore	JA001484 J8126743 J8126797 J8126798
19	Repair Kit, Wheel Cylinder	All All	Front Rear	1" Bore 3/4" Bore	J0115962 J8136601
20	Y-Fitting, Master Cylinder	All			JA000557
HOSES					
21	Tube, Brake	All	Front	"S"	JA001488
22	Brake Hose	All All All	Front Left or Right Front Center Rear Center	Axle to Knuckle; 6" Long Frame to Axle; 11" Long Frame to Axle; 16" Long	J0800953 J0800896 J0937884
23	Brake Tee	All	Front or Rear	Mounts to Axle	J0637432
MISCELLANEOUS					
24	Spring, Brake Pedal Return	All		w/ Single Reservoir Master Cylinder	J0641723
25	Brake Pedal Asembly	All		w/ Single Reservoir Master Cylinder	J0800527*
EMERGENCY BRAKE					
26	Drum, Emergency Brake	M38		w/ Bendix Style Shoes	A9332
27	Lining Kit, Emergrncy Brake	All			116712*
28	Shoe Set, Emergency Brake	M38		w/ Bendix Style Shoes	J0643055
CROWN KITS					
31	Drum Service Kit	M38 M38-A1	Includes Drums, Shoe Set & Hardware for 2 Wheels Includes Drums, Shoe Set, & Hardware for 2 Wheels		808770KE 808770KL
32	Manual Locking Hub Set	All			400501

*Not Currently Available

Copyright © 2014 Crown Automotive Sales Co., Inc. All rights reserved.

1945-1949 CJ-2A

9" x 1 3/4" Brakes - Eccentric Adjusting Type

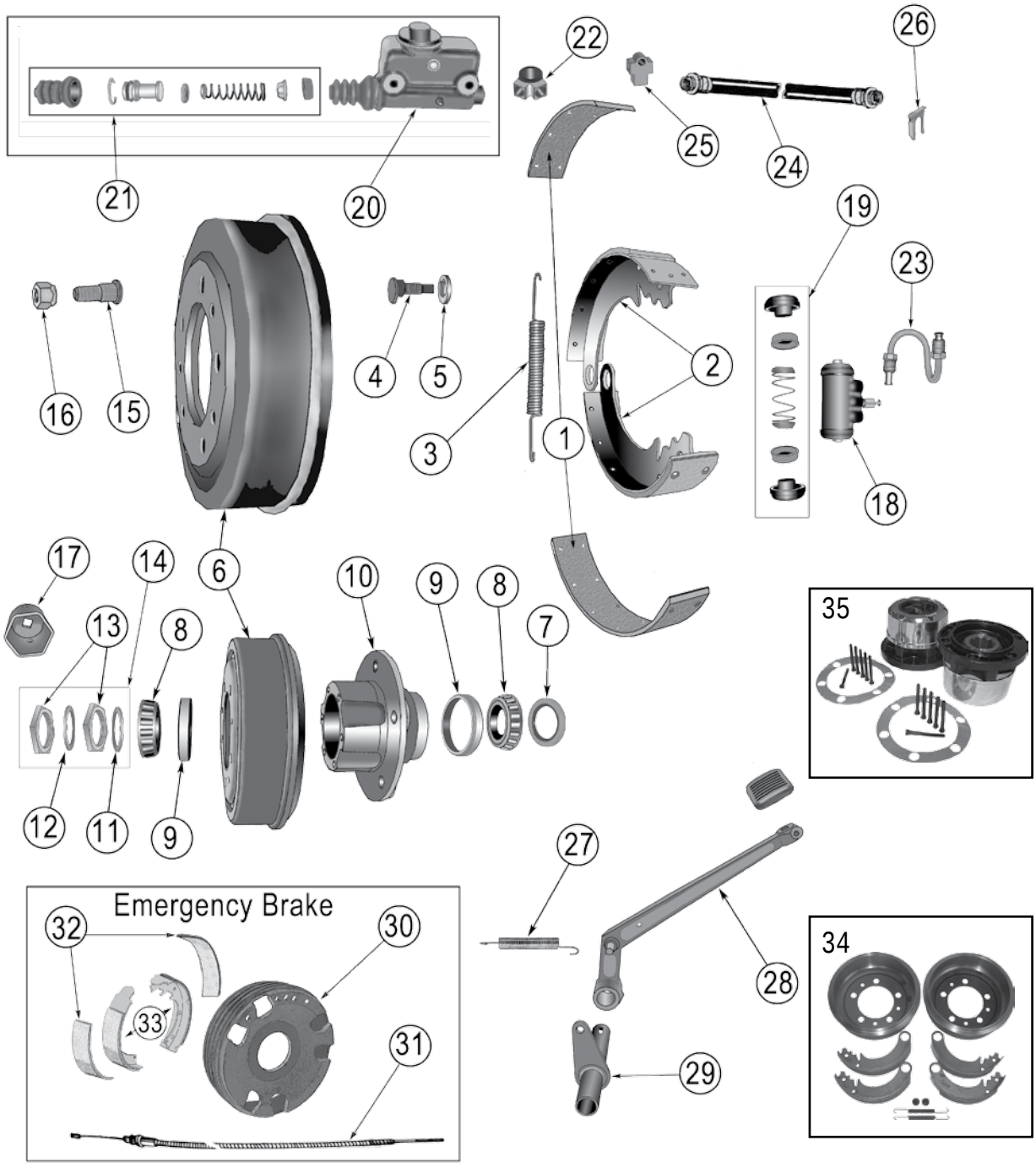

Item #	Decription	Location	Comments	Replaces Part #
FRONT & REAR DRUM BRAKES				
1	Lining Set	Front or Rear	Includes 4 Shoe Linings & 40 Rivets	116600
2	Shoe & Lining Set	Front or Rear		J0642967
3	Spring, Shoe Return	Front or Rear	Upper	J0637905
4	Eccentric, Brake Shoe	Front or Rear	2 Required Per Wheel	A754
5	Washer, Brake Shoe Eccentric	Front or Rear	2 Required Per Wheel	637900

Copyright © 2014 Crown Automotive Sales Co., Inc. All rights reserved.

1945-1949 CJ-2A • 9" x 1 3/4" Brakes - Eccentric Adjusting Type

Item #	Decription	Location	Comments	Replaces Part #
6	Drum	Front or Rear	Mounts Inside Hub	A-472*
HUBS, Etc.				
7	Seal, Hub	Front Rear		J0805150 J0805150
8	Bearing, Wheel	Front Inner or Outer		J0052942
9	Cup, Wheel Bearing	Front Inner or Outer Rear		J0052943 J0052800
10	Hub	Front Rear		J0909548 J0811351
11	Lock Washer, Wheel Bearing	Front Inner		JA000865
12	Lock Washer, Wheel Bearing	Front Outer		JA000867
13	Nut, Axle Bearing	Front	2 Required Per Wheel	JA000866
14	Axle Nut Kit	Front	Includes #11, 12, & 13	A867K
15	Stud, Hub	Front Front Rear	Left Hand Threads Right Hand Threads Left Hand Threads	JA000473 A474 JA000473
16	Wheel Nut	Front or Rear Front or Rear	Right Hand Threads Left Hand Threads; 1/2"-20; 13/16" Hex	J0635516 J0636035
17	Socket, Spindle Nut			A692N
HYDRAULICS				
18	Wheel Cylinder	Front Left or Right Rear Left or Right	1" Bore 3/4" Bore	JA001484 J8126797
19	Repair Kit, Wheel Cylinder	Front Left or Right Rear Left or Right	For 1" Bore Wheel Cylinders For 3/4" Bore Wheel Cylinders	J0115962 J8136601
20	Master Cylinder		Both Mounting Holes Unthreaded	J8136618
21	Repair Kit, Master Cylinder			805654
22	Y-Fitting, Master Cylinder			JA000557
HOSES				
23	Tube, Brake	Front	"S"	JA001488
24	Brake Hose	Front Left or Right Front Center Rear Center	6" Long; Axle to Knuckle 11" Long; Frame to Axle 16" Long; Frame to Axle	J0800953 J0800896 J0937884
25	Brake Tee	Front or Rear	Mounts to Axle	J0637432
26	Clip, Brake Hose	Front or Rear		J0637427
MISCELLANEOUS				
27	Spring, Brake Pedal Return		w/ Single Reservoir Master Cylinder	J0641723
28	Brake Pedal Asembly		w/ Single Reservoir Master Cylinder	J0800527*
29	Shaft, Brake Pedal		1948-1949	A495
EMERGENCY BRAKE				
30	Drum, Emergency Brake			A9332
31	Cable, Emergency Brake		To Serial #183948; 42-1/4" Long After Serial #183948; w/ Cane Handle; 44-3/8" Long	J0640353 J0646142
32	Lining Kit, Emergency Brake			116712*
33	Shoe Set, Emergency Brake			J0643055
CROWN KITS				
34	Drum Service Kit	Front or Rear	Includes Drums, Shoe Set & Hardware for 2 Wheels	808770KE
35	Manual Locking Hub Set	Front		400501

*Not Currently Available

Copyright © 2014 Crown Automotive Sales Co., Inc. All rights reserved.

1948-1953 CJ-3A

9" x 1 3/4" Brakes - Eccentric Adjusting Type

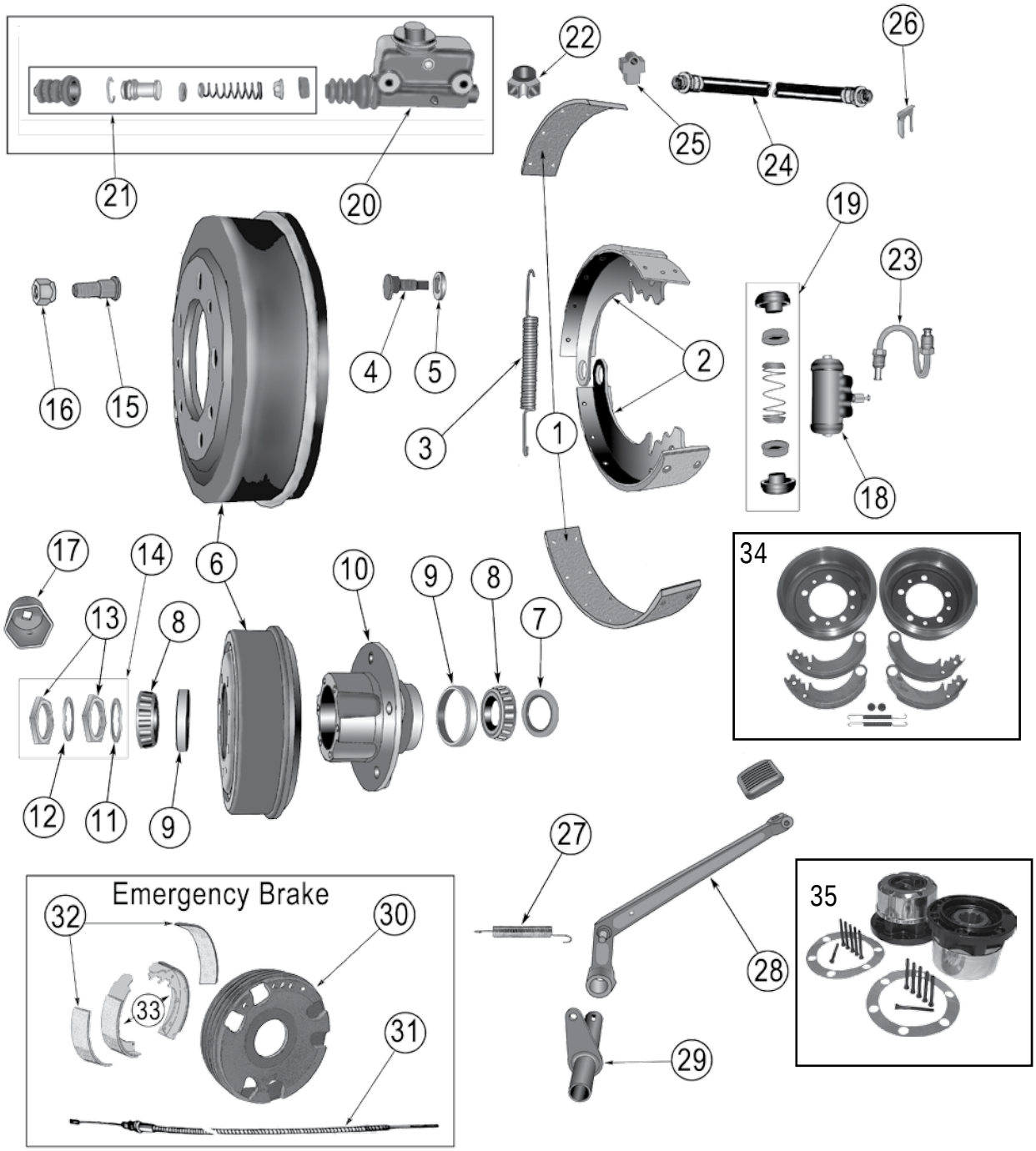

Item #	Decription	Location	Comments	Replaces Part #
FRONT & REAR DRUM BRAKES				
1	Lining Set	Front or Rear	Includes 4 Shoe Linings & 40 Rivets	116600
2	Shoe & Lining Set	Front or Rear		J0642967
3	Spring, Shoe Return	Front or Rear	Upper	J0637905
4	Eccentric, Brake Shoe	Front or Rear	2 Required Per Wheel	A754
5	Washer, Brake Shoe Eccentric	Front or Rear	2 Required Per Wheel	637900
6	Drum	Front or Rear	Mounts Inside Hub	A-472*

Copyright © 2014 Crown Automotive Sales Co., Inc. All rights reserved.

1948-1953 CJ-3A • 9" x 1 3/4" Brakes - Eccentric Adjusting Type

Item #	Decription	Location	Comments	Replaces Part #
HUBS, Etc.				
7	Seal, Hub	Front Rear		J0805150 J0805150
8	Bearing, Wheel	Front Inner or Outer		J0052942
9	Cup, Wheel Bearing	Front Inner or Outer Rear Inner or Outer Rear		J0052943 J0052943 J0052800
10	Hub	Front Rear		J0909548 J0811351
11	Lock Washer, Wheel Bearing	Front Inner		JA000865
12	Lock Washer, Wheel Bearing	Front Outer		JA000867
13	Nut, Axle Bearing	Front	2 Required Per Wheel	JA000866
14	Axle Nut Kit	Front	Includes #11, 12, & 13	A867K
15	Stud, Hub	Front Front Rear	Left Hand Threads Right Hand Threads Left Hand Threads	JA000473 J5353025 JA000473
16	Wheel Nut	Front or Rear Front or Rear	Right Hand Threads Left Hand Threads; 1/2"-20; 13/16" Hex	J0635516 J0636035
17	Socket, Spindle Nut			A692N
HYDRAULICS				
18	Wheel Cylinder	Front Left or Right Rear Left or Right	1" Bore 3/4" Bore	JA001484 J8126797
19	Repair Kit, Wheel Cylinder	Front Left or Right Rear Left or Right	For 1" Bore Wheel Cylinders For 3/4" Bore Wheel Cylinders	J0115962 J8136601
20	Master Cylinder		Both Mounting Holes Unthreaded	J8136618
21	Repair Kit, Master Cylinder			805654
22	Y-Fitting, Master Cylinder			JA000557
HOSES				
23	Tube, Brake	Front	"S"	JA001488
24	Brake Hose	Front Left or Right Front Center Rear Center	Axle to Knuckle; 6" Long Frame to Axle; 11" Long Frame to Axle; 16" Long	J0800953 J0800896 J0937884
25	Brake Tee	Front or Rear	Mounts to Axle	J0637432
26	Clip, Brake Hose	Front or Rear		J0637427
MISCELLANEOUS				
27	Spring, Brake Pedal Return		w/ Single Reservoir Master Cylinder	J0641723
28	Brake Pedal Asembly		w/ Single Reservoir Master Cylinder	J0800527*
29	Shaft, Brake Pedal			A495
EMERGENCY BRAKE				
30	Drum, Emergency Brake			A9332
31	Cable, Emergency Brake		w/ Cane Handle; 44-3/8" Long	J0646142
32	Lining Kit, Emergency Brake			116712*
33	Shoe Set, Emergency Brake			J0643055
CROWN KITS				
34	Drum Service Kit	Front or Rear	Includes Drums, Shoe Set & Hardware for 2 Wheels	808770KE
35	Manual Locking Hub Set	Front		400501

*Not Currently Available

Copyright © 2014 Crown Automotive Sales Co., Inc. All rights reserved.

1953-1968 CJ-3B

9" x 1 3/4" Brakes - Eccentric Adjusting Type

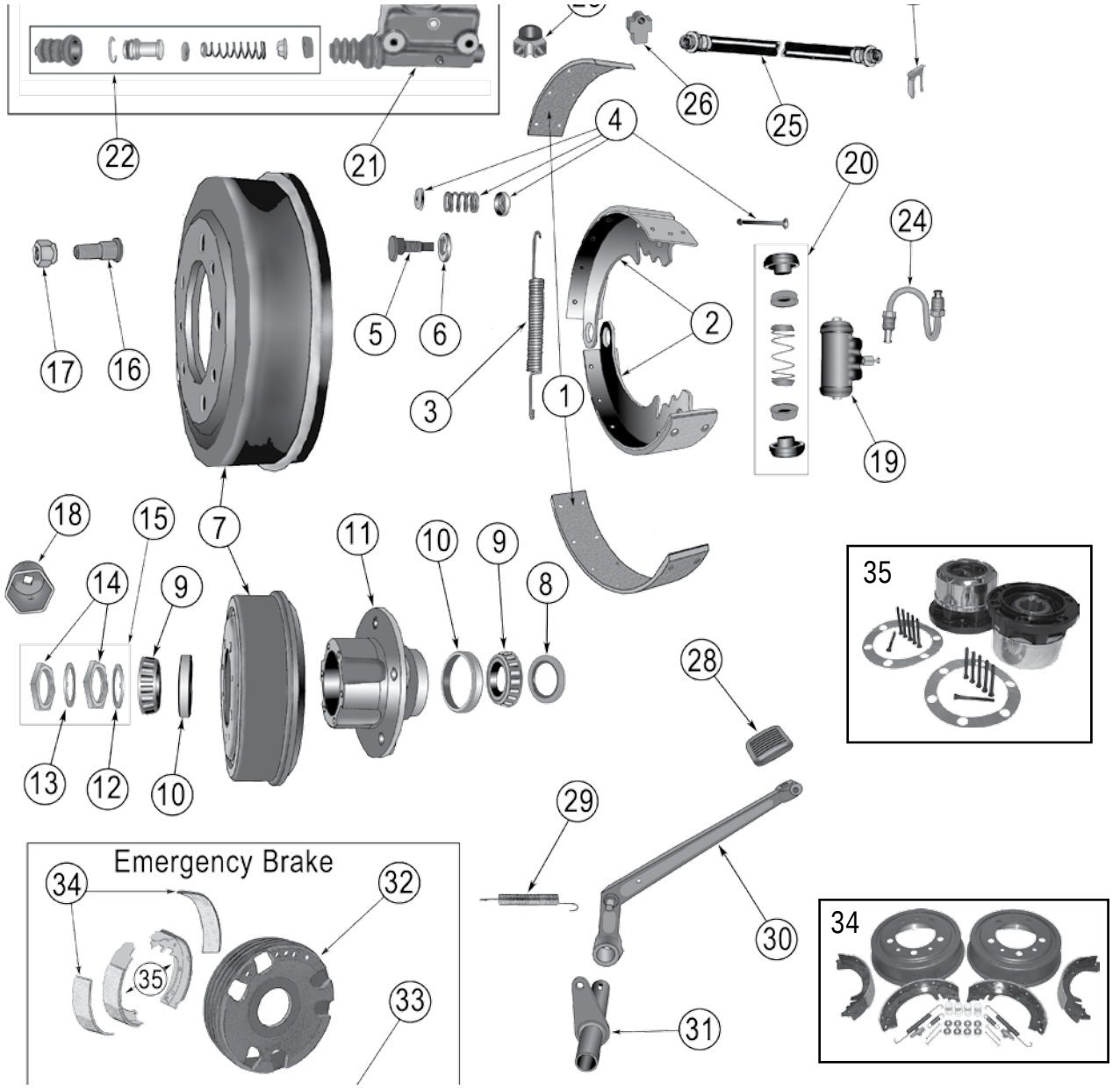

Item #	Decription	Location	Comments	Replaces Part #
FRONT & REAR DRUM BRAKES				
1	Lining Set	Front or Rear	Includes 4 Shoe Linings & 40 Rivets	116600
2	Shoe & Lining Set	Front or Rear		J0807376
3	Spring, Shoe Return	Front or Rear Front or Rear	Upper Lower	J0637905 J0805602
4	Hold Down Kit, Brake Shoe	Front or Rear	For 1 Wheel	J0120239
5	Eccentric, Brake Shoe	Front or Rear	2 Required Per Wheel	J0805592
6	Washer, Brake Shoe Eccentric	Front or Rear	2 Required Per Wheel	637900
7	Drum	Front or Rear	Mounts Outside of Hub	J0808770
HUBS, Etc.				
8	Seal, Hub	Front Front Rear	w/ Bearings Marked 18590 w/ Bearings Marked LM-501349	J0805150 J0938151 J0805150

Copyright © 2014 Crown Automotive Sales Co., Inc. All rights reserved.

1953-1968 CJ-3B • 9" x 1 3/4" Brakes - Eccentric Adjusting Type

Item #	Decription	Location	Comments	Replaces Part #
9	Bearing, Wheel	Front Inner or Outer Front Inner or Outer	w/ Bearings Marked 18590 w/ Bearings Marked LM-501349	J0052942 J3156052
10	Cup, Wheel Bearing	Front Inner or Outer Front Inner or Outer Rear	w/ Bearings Marked 18590 w/ Bearings Marked LM-501349	J0052943 J0925447 J0052800
11	Hub	Front Front Rear	w/ Bearings Marked 18590; Bare w/ Bearings Marked LM-501349; Includes Cups & Wheel Studs	J0909548 J8136650 J0811351
12	Lock Washer, Wheel Bearing	Front Inner		JA000865
13	Lock Washer, Wheel Bearing	Front Outer		JA000867
14	Nut, Axle Bearing	Front	2 Required Per Wheel	JA000866
15	Axle Nut Kit	Front	Includes #12, 13, & 14	A867K
16	Stud, Hub	Front Front Front Rear Rear	w/ Bearings Marked 18590; Left Hand Threads w/ Bearings Marked 18590; Right Hand Threads w/ Bearings Marked LM-501349; Right Hand Threads Left Hand Threads Right Hand Threads	JA000473 J5353025 83503053 JA000473 J5353025
17	Wheel Nut	Front or Rear Front or Rear	Right Hand Threads Left Hand Threads; 1/2"-20; 13/16" Hex	J0635516 J0636035
18	Socket, Spindle Nut			A692N
HYDRAULICS				
19	Wheel Cylinder	Front Left or Right Front Left Front Right Rear Left or Right	1953-59; w/ Straight Hose Connections; 1" Bore 1960-68; w/ Angled Hose Connections; 1" Bore 1960-68; w/ Angled Hose Connections; 1" Bore 3/4" Bore	J8126743 J0803639 J0803640 J8126798
20	Repair Kit, Wheel Cylinder	Front Rear	1" Bore 3/4" Bore	J0115962 J8126798
21	Master Cylinder		w/ Single Reservoir Master Cylinder	J8136618
22	Repair Kit, Master Cylinder		w/ Single Reservoir Master Cylinder	805654
23	Y-Fitting, Master Cylinder		1953-59	JA000557
HOSES				
24	Brake	Front	1953-59; "S"	JA001488
25	Brake Hose	Front Left or Right Front Center Rear Center	Axle to Knuckle; 6" Long Frame to Axle; 11" Long Frame to Axle; 16" Long	J0800953 J0800896 J0937884
26	Brake Tee	Front or Rear	Mounts to Axle	J0637432
27	Clip, Brake Hose	Front or Rear		J0637427
MISCELLANEOUS				
28	Pad, Brake Pedal		1957-65; Rubber	J5363508
29	Spring, Brake Pedal Return		w/ Single Reservoir Master Cylinder	J0641723
30	Brake Pedal Asembly		w/ Single Reservoir Master Cylinder	J0800527*
31	Shaft, Brake Pedal		1953-66	A495
EMERGENCY BRAKE				
31	Drum, Emergency Brake			A9332
33	Cable, Emergency Brake		w/ Cane Handle; 44-3/8" Long w/ T-Lever w/ T90 Transmission; 63-5/8" Long w/ T-Lever w/ T98 Transmission; 69" Long	J0646142 J0906750 J0911693
34	Lining Kit, Emergency Brake			116712*
35	Shoe Set, Emergency Brake			J0643055
CROWN KITS				
34	Drum Service Kit	Front or Rear	w/ 9" Brakes; Includes Drums, Shoes, Linings & Hardware for 2 Wheels	808770KL
35	Manual Locking Hub Set	Front		400501

*Not Currently Available

Copyright © 2014 Crown Automotive Sales Co., Inc. All rights reserved.

1955-1983 CJ-5
1955-1975 CJ-6

1955-1965 - 9" x 1-3/4" Eccentric Adjusting	Front or Rear
1966-1971 - 10" x 2" Screw Adjusting	Front or Rear
1969-1978 - 11" x 2" Bendix Screw Adjusting	Front or Rear
1976-1978 - 11-3/4" x 1-1/8" Disc Brake	Front
1978-1983 - 11-3/4" x 7/8" Disc Brake	Front
1978-1983 - 10" x 1-3/4" Screw Adjusting	Rear

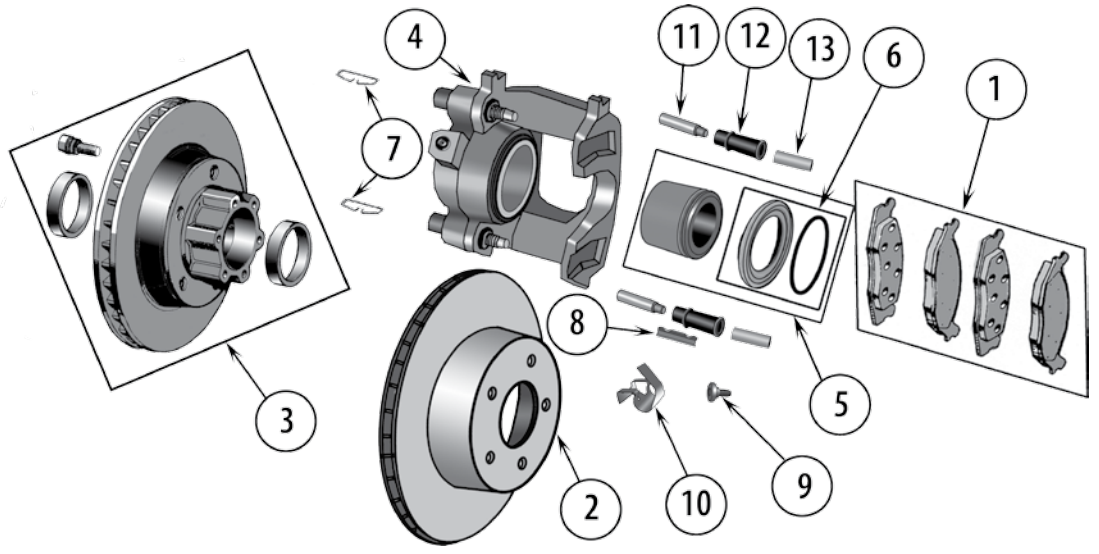

Item #	Decription	Years	Size	Location	Comments	Replaces Part #
FRONT DISC BRAKES						
1	Pad Set	1976-78 1978-81 1982-83			w/ 6-Bolt Caliper Brackets w/ 2-Bolt Caliper Brackets	J8126314 J8131785 83501167
2	Rotor Only	1978-83	7/8" Thick		w/ 2-Bolt Caliper Brackets	5363421R
3	Hub & Rotor Assembly	1978-81 1981-83	7/8" Thick 7/8" Thick		w/ 6-Bolt Flange Mounting w/ 5-Bolt Flange Mounting	J5358568 J5363421
4	Caliper Assembly	1978-81 1978-81 1982-83 1982-83		Right Left Right Left	Less Pads Less Pads Less Pads Less Pads	J8131649 J8131648 J8133846 J8133847
5	Piston Kit, Caliper	1978-81 1982-83			Includes 1 Piston, 1 Seal, & 1 Boot Includes 1 Piston, 1 Seal, & 1 Boot	J8127582 J8133845
6	Seal Kit, Caliper	1978-81 1982-83			Includes 1 Seal & 1 Boot Includes 1 Seal & 1 Boot	J8127583 J8133852
7	Spring, Caliper Support	1976-78 1982-83			w/ 6-Bolt Caliper Brackets; 4 Required Anti-Rattle Clip; 4 Required	J3223413 J3239865
8	Key, Caliper Support	1976-78			w/ 6-Bolt Caliper Brackets	J3223414
9	Screw, Caliper Support	1976-81				J3223416
10	Clip, Caliper Support	1978-81				J3229033
11	Pin, Caliper	1982-83				83504655
12	Sleeve, Caliper Pin	1982-83			Inner	52001701
13	Bushing, Caliper Pin	1982-83			Outer	J3239867

Copyright © 2014 Crown Automotive Sales Co., Inc. All rights reserved.

1955-1983 CJ-5 • 1955-1975 CJ-6 (Continued)

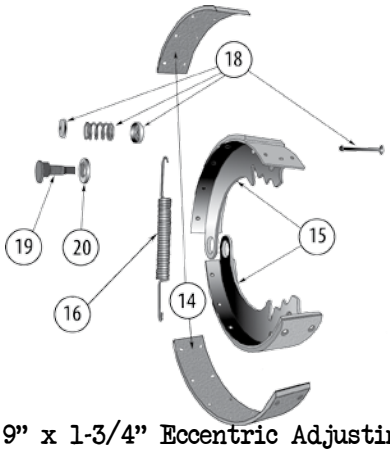

9" x 1-3/4" Eccentric Adjusting

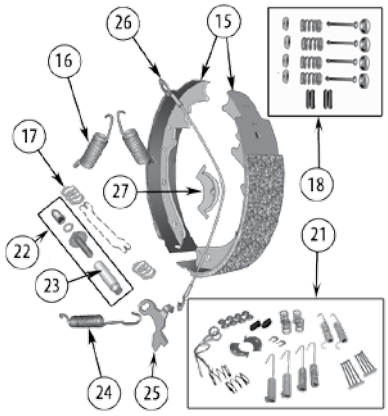

11" x 2 " Screw Adjusting

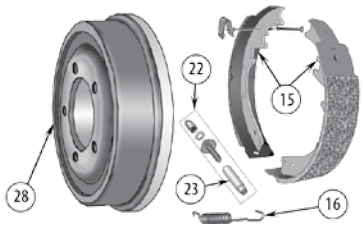

10" X 2" Adjusting Screw

Item #	Decription	Years	Size	Location	Comments	Replaces Part #
FRONT & REAR DRUM BRAKES						
14	Lining Set	1955-65	9" x 1-3/4"	Front or Rear	Includes 4 Shoe Linings & 40 Rivets	116600
15	Shoe & Lining Set	1955-65	9" x 1-3/4"	Front or Rear		J0807376
		1966-71	10" x 2"	Front or Rear		J8120393
		1969-78	11" x 2"	Front or Rear		J8130067
		1978-83	10" x 1-3/4"	Rear		J8133818
16	Spring, Brake Shoe Return	1955-65	9" x 1-3/4"	Front or Rear	Lower	J0805602
		1955-65	9" x 1-3/4"	Front or Rear	Upper	J0637905
		1966-71	10" x 2"	Front or Rear	Upper; 2 Required Per Wheel	J0938111
		1969-78	11" x 2"	Front or Rear		J0937953
17	Spring, Parking Brake Lever Strut	1969-78	11" x 2"	Rear		83504310
18	Hold Down Kit, Brake Shoe	1955-65	9" x 1-3/4"	Front or Rear	For 1 Wheel	J0120239
		1969-78	11" x 2"	Front or Rear		J0937952
19	Eccentric, Brake Shoe	1955-65	9" x 1-3/4"	Front or Rear	2 Required Per Wheel	J0805592
20	Washer, Brake Shoe Eccentric	1955-65	9" x 1-3/4"	Front or Rear	2 Required Per Wheel	637900
21	Small Parts Master Kit	1978-83	10" x 1-3/4"	Rear		4636777
22	Adjuster Kit, Brake Shoe	1966-71	10" x 2"	Left Front		52001215
		1966-71	10" x 2"	Right Front		52001216
		1966-71	10" x 2"	Left Rear		52001216
		1966-71	10" x 2"	Right Rear		52001215
		1969-78	11" x 2"	Left Front or Rear		943131A
		1969-78	11" x 2"	Right Front or Rear		943132A
		1978-83	10" x 1-3/4"	Left Rear		52001216
		1978-83	10" x 1-3/4"	Right Rear		52001215
23	Nut, Brake Shoe Adjusting	1969-78	11" x 2"	Front or Rear		J0998350
24	Spring, Adjusting Screw	1966-71	10" x 2"	Front or Rear		J0945306
		1969-78	11" x 2"	Front or Rear		J0943136
25	Lever, Automatic Adjust	1969-78	11" x 2"	Left Front or Rear		J0943140
		1969-78	11" x 2"	Right Front or Rear		J0943141
26	Cable, Automatic Adjust	1969-78	11" x 2"	Front or Rear		J0943138
27	Guide, Automatic Adjust Cable	1969-78	11" x 2"	Front or Rear		J3201947
28	Drum	1955-65	9" x 1-3/4"	Front or Rear	Mounts Outside of Hub	J0808770
		1966-71	10" x 2"	Front or Rear		J0994306
		1972-74	11" x 2"	Front	Smooth	J0999728
		1974-78	11" x 2"	Front	Finned	J5352476
		1971-75	11" x 2"	Rear	w/ Flanged Dana 44; Smooth	J0999728
		1974-75	11" x 2"	Rear	w/ Flanged Dana 44; Finned	J5352476
		1976-78	11" x 2"	Rear		J5352476
		1978-83	10" x 1-3/4"	Rear		52002952

*Not Currently Available

Continued on Next Page

Copyright © 2014 Crown Automotive Sales Co., Inc. All rights reserved.

1955-1983 CJ-5 • 1955-1975 CJ-6 (Continued)

Drum Brakes

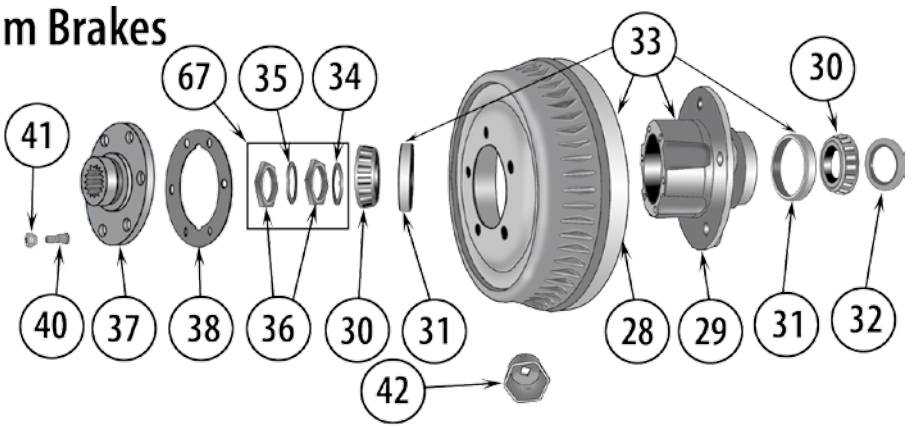

Hydraulics

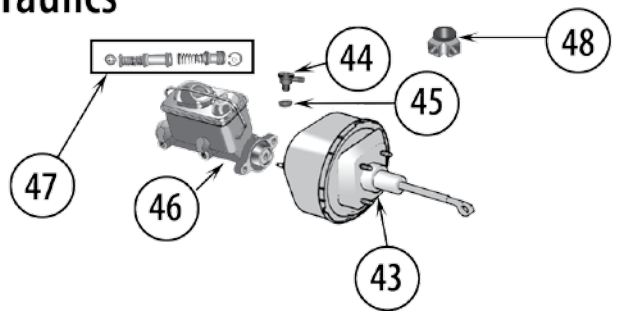

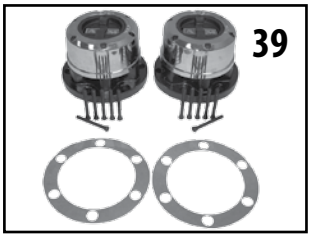

Item #	Decription	Years	Size	Location	Comments	Replaces Part #
HUBS, Etc.						
29	Hub	1955-65	All	Front	w/ Bearings Marked 18590; Bare	J0909548
		1955-71	All	Front	w/ Bearings Marked LM-501349; Includes Cups & Wheel Studs	J8136650
		1969-75	All	Front	w/ 1-5/8" Inner Wheel Bearing Cup	J8136650
		1976	All	Front	Includes Cups and Wheel Studs	J8136650
		1976	All	Front	w/ 1-3/4" Inner Wheel Bearing Cup	J8136651
		1977-78	All	Front	Includes Cups and Wheel Studs	J8136651
		1978-81	Disc	Front	w/ 6-Bolt Flange Mounting	5358568H
		1981-83	Disc	Front	w/ 5-Bolt Flange Mounting	5363421H
		1955-69	All	Rear		J0811351
		1976-83	All	Rear	w/ AMC 20 Axle	J8133730
30	Bearing, Wheel	1955-65	All	Front Inner or Outer	w/ Bearing Marked 18590	J0052942
		1955-65	All	Front Inner or Outer	w/ Bearing Marked LM-501349	J3156052
		1966-76	All	Front Inner	w/ 1-5/8" O.D. Cup- LM-501349	J3156052
		1976-83	All	Front Inner	w/ 1-3/4" O.D. Cup- LM-120949	J5356661
		1966-83	All	Front Outer	w/ 1-5/8" O.D. Cup- LM-501349	J3156052
31	Cup, Wheel Bearing	1955-65	All	Front Inner or Outer	w/ Bearings Marked 18590	J0052943
		1955-65	All	Front Inner or Outer	w/ Bearings Marked LM-501349	J0925447
		1966-76	All	Front Inner	1-5/8" O.D. - LM-501349	J0925447
		1976-83	All	Front Inner	1-3/4" O.D. - LM-120949	J8127630
		1966-83	All	Front Outer	1-5/8" O.D. - LM-501349	J0925447
32	Seal, Hub	1955-65	All	Front	w/ Bearings Marked 18590	J0805150
		1955-65	All	Front	w/ Bearings Marked LM-501349	J0938151
		1966-75	All	Front		J0938151
		1976	All	Front	Used w/ 1-5/8" O.D. Cup	J0938151
		1976-83	All	Front	Used w/ 1-3/4" O.D. Cup	J5365082

Copyright © 2014 Crown Automotive Sales Co., Inc. All rights reserved.

1955-1983 CJ-5 • 1955-1975 CJ-6 (Continued)

Item #	Decription	Years	Size	Location	Comments	Replaces Part #
33	Hub & Drum Assembly	1976-78	11" x 2"	Rear	w/ AMC 20 Axle	J5355714
34	Lock Washer, Wheel Bearing	1955-83	All	Front Inner		JA000865
35	Lock Washer, Wheel Bearing	1955-83	All	Front Outer		JA000867
36	Nut, Axle Bearing	1955-83	All	Front	2 Required Per Wheel	JA000866
37	Flange, Front Hub	1972-81 1981-83	All All	Front Front	w/ 6 Bolts w/ 5 Bolts	J0999396 J5362000
38	Gasket, Hub Flange	1972-81 1981-83	All All	Front Front	w/ 6 Bolts w/ 5 Bolts	J0649784 J5362001
39	Locking Hub Set	1972-81 1981-83	All All	Front Front	w/ 6 Bolts w/ 5 Bolts	400502 400526
40	Stud, Wheel	1955-65 1955-65 1955-65 1966-71 1972-78 1977-86 1955-71 1955-71 1969-75 1976-83	All All All All Drum Disc All All All All	Front Front Front Front Front Front Rear Rear Rear Rear	w/ Bearings Marked 18590; Left Hand Threads w/ Bearings Marked 18590; Right Hand Threads w/ Bearings Marked LM-501349; Right Hand Threads w/ Tapered Axle Shafts; Left Hand Threads w/ Tapered Axle Shafts; Right Hand Threads w/ Flanged Axle Shafts	JA000473 J5353025 83503053 J0945451 J5353025 J5357196 JA000473 J5353025 J5355719 J5355719
41	Wheel Nut	1955-83 1955-71 1977-83	All All All	Front or Rear Front or Rear Front or Rear	Right Hand Threads; Open-Ended; 1/2"-20 Left Hand Threads; Open-Ended; 1/2"-20 Right Hand Threads; Chrome Capped; 1/2"-20	J0635516 J0636035 J4005694
42	Socket, Spindle Nut	All	All	Front		A692N
HYDRAULICS						
43	Booster, Brake	1982-83			Includes Boot	J8133909
44	Valve, Brake Booster Check	1982-83			w/ Power Brakes	J4487455
45	Grommet, Brake Check Valve	1982-83			w/ Power Brakes	4723640
46	Master Cylinder	1955-65 1966-71 1968-75 1976 1977-78 1977-78 1978-83 1977-78 1978-83	9" x 1-3/4" 10" x 2" 11" x 2" Drum Disc Disc Disc Disc		w/ Single Reservoir Master Cylinder w/ Dual Reservoir Master Cylinder w/o Power Brakes w/o Power Brakes w/ 6-Bolt Caliper Brackets w/o Power Brakes w/ 2-Bolt Caliper Brackets w/ Power Brakes w/ 6-Bolt Caliper Brackets w/ Power Brakes w/ 2-Bolt Caliper Brackets	J8136618 J0945556 J8126737 J8127792 J8127792 83300115 J8134270 J8127821 83300111
47	Repair Kit, Master Cylinder	1955-65 1966-71 1968-75 1976 1977-78 1978-83 1978-83	9" x 1-3/4" 10" x 2" 11" x 2" Drum Disc Disc		w/ Single Reservoir Master Cylinder w/ Dual Reservoir Master Cylinder w/o Power Brakes w/ Power Brakes w/ 2-Bolt Caliper Brackets w/o Power Brakes w/ 2-Bolt Caliper Brackets	805654 J8126747 J8126747 J8127772 J8127772 J8134247 J8134266
48	Y-Fitting, Master Cylinder	1955-65				JA000557

Continued on Next Page

Copyright © 2014 Crown Automotive Sales Co., Inc. All rights reserved.

1955-1983 CJ-5 • 1955-1975 CJ-6 (Continued)

Hydraulics (Continued)

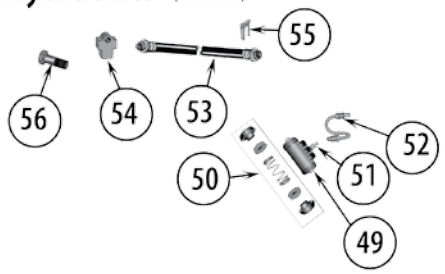

Miscellaneous

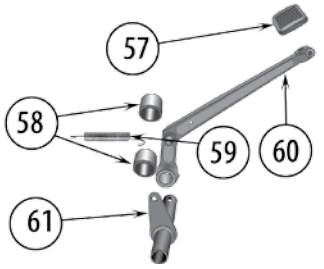

Emergency Brake

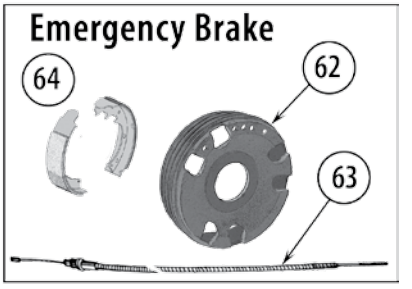

Item #	Decription	Years	Size	Location	Comments	Replaces Part #
49	Wheel Cylinder	1955-59	9″ x 1-3/4″	Front Left or Right	w/ Straight Hose Connections; 1″ Bore	J8126743
		1960-65	9″ x 1-3/4″	Front Left	w/ Angled Hose Connections; 1″ Bore	J0803639
		1960-65	9″ x 1-3/4″	Front Right	w/ Angled Hose Connections; 1″ Bore	J0803640
		1966-71	10″ x 2″	Front Left or Right	1″ Bore	J0938115
		1966-71	10″ x 2″	Front Left or Right	1-1/8″ Bore	J0991526
		1969-78	11″ x 2″	Front Left	1-1/8″ Bore	J8126766
		1969-78	11″ x 2″	Front Right	1-1/8″ Bore	J8126692
		1955-65	9″ x 1-3/4″	Rear Left or Right	3/4″ Bore	J8126798
		1966-71	10″ x 2″	Left Rear	13/16″ Bore	J8126744
		1966-71	10″ x 2″	Right Rear	13/16″ Bore	J8136612
		1969-75	11″ x 2″	Left Rear	15/16″ Bore	J8126775
		1969-75	11″ x 2″	Right Rear	15/16″ Bore	J8124799
		1976-78	11″ x 2″	Left Rear	7/8″ Bore	52000849
		1976-78	11″ x 2″	Right Rear	7/8″ Bore	52000848
		1978-83	10″ x 1-3/4″	Left Rear	7/8″ Bore	52000849
		1978-83	10″ x 1-3/4″	Right Rear	7/8″ Bore	52000848
50	Repair Kit, Wheel Cylinder	1955-65	9″ x 1-3/4″	Front	1″ Bore	J0115962
		1966-71	10″ x 2″	Front	1″ Bore	J8126751
		1966-71	10″ x 2″	Front	1-1/8″ Bore	J8126753
		1969-78	11″ x 2″	Front	1-1/8″ Bore	J8126753
		1955-65	9″ x 1-3/4″	Rear	3/4″ Bore	J8136601
		1966-71	10″ x 2″	Rear	1″ Bore	J8126751
		1969-78	11″ x 2″	Rear	7/8″ Bore	83500987
		1969-78	11″ x 2″	Rear	15/16″ Bore	J8125880
		1969-78	11″ x 2″	Rear	1″ Bore	8126964
		1978-83	10″ x 1-3/4″	Rear	7/8″ Bre	83500987
51	Screw, Bleeder	1978-83	Disc	Front		J8129722
		1978-83		Rear		J8129722
52	Tube, Brake	1955-59	9″ x 1-3/4″	Front Left or Right	“S”	JA001488
53	Brake Hose	1955-65	9″ x 1-3/4″	Front Left or Right	Axle to Knuckle; 6″ Long	J0800953
		1955-65	9″ x 1-3/4″	Front Center	Frame to Axle; 12″ Axle	J0800896
		1966-71	10″ x 2″	Front Center	Frame to Axle	J0937347
		1969-73	11″ x 2″	Front Center	Frame to Axle; 15″ Long	J5350663
		1974-75	11″ x 2″	Front Center	Frame to Axle; 17″ Long	J5352825
		1976-78	11″ x 2″	Front Center	Frame to Axle; 15″ Long	J5356054
		1978-81	Disc	Front Left or Right	Square End Hose; Frame to Caliper	J5359037
		1982-83	Disc	Front Left or Right	Frame to Caliper	J5363917
		1955-65	9″ x 1-3/4″	Rear Center	Frame to Axle; 16″ Long	J0937884
		1966-71	10″ x 2″	Rear Center	Frame to Axle; 16″ Long	J0937884
		1974-75	11″ x 2″	Rear Center	Frame to Axle	J5352824
		1976-78	11″ x 2″	Rear Center	Frame to Axle; 17-3/4″ Long	J5359570
		1978-83	10″ x 1-3/4″	Rear Center	Frame to Axle; 17-3/4″ Long	J5362842

Copyright © 2014 Crown Automotive Sales Co., Inc. All rights reserved.

1955-1983 CJ-5 • 1955-1975 CJ-6 (Continued)

Item #	Decription	Years	Size	Location	Comments	Replaces Part #
54	Brake Tee	1955-65	9″ x 1-3/4″	Front or Rear	Mounts to Axle	J0637432
		1966-71	10″ x 2″	Front or Rear	Mounts to Axle	J0637432
		1969-78	11″ x 2″	Front or Rear	Mounts to Axle	J0637432
55	Clip, Brake Hose	All	All	All		J0637427
56	Bolt, Hose Inlet	1982-83	Disc	Front		6035911AA
MISCELLANEOUS						
57	Pad, Brake Pedal	1957-83	All		w/ Manual Transmission; Rubber	J5363508
58	Bushing, Brake Pedal	1976-83			Bronze	J0946177
59	Spring, Brake Pedal Return	1955-65	9″ x 1-3/4″		w/ Single Reservoir Master Cylinder	J0641723
60	Brake Pedal Asembly	1955-65	9″ x 1-3/4″		w/ Single Reservoir Master Cylinder	J0800527*
61	Shaft, Brake Pedal	1955-65	9″ x 1-3/4″			A495
EMERGENCY BRAKE						
62	Drum, Parking Brake	1955-65	9″ x 1-3/4″			A9332
63	Cable, Parking Brake	1955-71	All		w/ Cane Handle; 44-1/2″ Long	J0646142
		1955-71	All		w/ T-Lever w/ T90 Transmission; 63-5/8″ Long	J0906750
		1955-71	All		w/ T-Lever w/ T98 Transmission; 69″ Long	J0911693
		1972-75 CJ-5	All		Lever To Equalizer	J0999978
		1976-83	All		Lever To Equalizer	J5355287
		1972-75	All	Left or Right	Equalizer to Wheels; 67.5″ Long	J0999980
		1976-78	11″ x 2″	Left	Equalizer to Wheels; Bolt-On; 30.5″ Long	J5355325
		1976-78	11″ x 2″	Right	Equalizer to Wheels; Bolt-On; 62″ Long	J5355324
		1978-83	10″ x 1-3/4″	Left Rear	Equalizer to Wheels; 31-1/4″ Long	J3233903
		1978-80	10″ x 1-3/4″	Right Rear	Equalizer to Wheels; 60-1/2″ Long	J3233904
		1981-83	10″ x 1-3/4″	Right Rear	Equalizer to Wheels; 61-1/4″ Long	J3239949
64	Shoe Set, Parking Brake	1955-65	9″ x 1-3/4″			J0643055
CROWN KITS						
65	Stainless Steel Brake Hose Kit	1982-83		Front & Rear	w/ 0″ to 4″ of Lift	7405
66	Wheel Bearing Kit	1976-83	Disc	Front	Includes Bearings & Seals	5356661K
67	Washer & Nut Kit, Spindle	1955-83		Front	Includes 2 Spindle Nuts and 2 Washers	A867K
68	Axle Nut Kit	1976-83		Rear	w/ AMC 20 Axle; Includes 1 Nut, 1 Washer & 1 Key	3155675K
69	Hub Kit	1976-83		Rear	w/ AMC 20 Axle; Includes Bearings, Seals, & Hardware	8133730K
70	Pad Set Master Kit	1982-83		Front	Includes Pads, Bushings, Clips, & Bolts	83501167MK
71	Shoe Set Master Kit	1982-83	10″ x 1-3/4″	Rear	Includes Shoe Set & Hardware	8133818MK
72	Brake Drum Service Kit	1955-71	9″ x 1-3/4″	Front or Rear	Includes 2 Drums, Shoe Set, and Hardware	808770KL
73	Brake Drum Service Kit	1974-78	11″ x 2″	Front or Rear	Includes 2 Drums, Shoe Set, and Hardware	5352476K
74	Brake Drum Service Kit	1978-83	10″ x 1-3/4″	Rear	Includes 2 Drums, Shoe Set, and Hardware	52002952K
75	Disc Brake Service Kit	1976-78	Disc	Front	w/ 6-Bolt Caliper Brackets	5356183RK
76	Disc Brake Service Kit	1978-81	Disc	Front	w/ 6-Bolt Flange Mounting w/ 2-Bolt Caliper Brackets	5358568RK
77	Disc Brake Service Kit	1982-83	Disc	Front	w/ 5-Bolt Flange Mounting	5363421RK

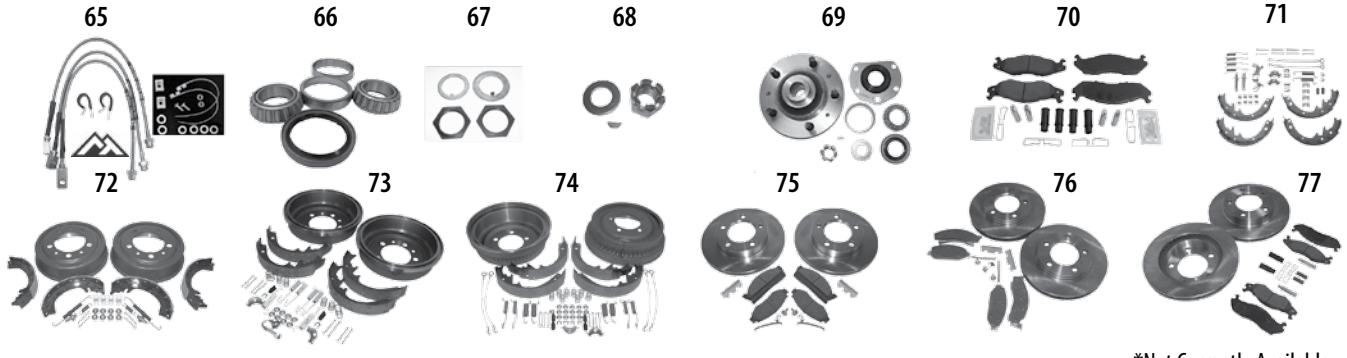

*Not Currently Available

Copyright © 2014 Crown Automotive Sales Co., Inc. All rights reserved.

1976-1986 CJ-7
1981-1986 CJ-8

1976-1978 - 11" x 2" Bendix Screw Adjusting	Front or Rear
1976-1978 - 11-3/4" x 1-1/8" Disc Brake	Front
1978-1983 - 11-3/4" x 7/8" Disc Brake	Front
1978-1983 - 10" x 1-3/4" Screw Adjusting	Rear

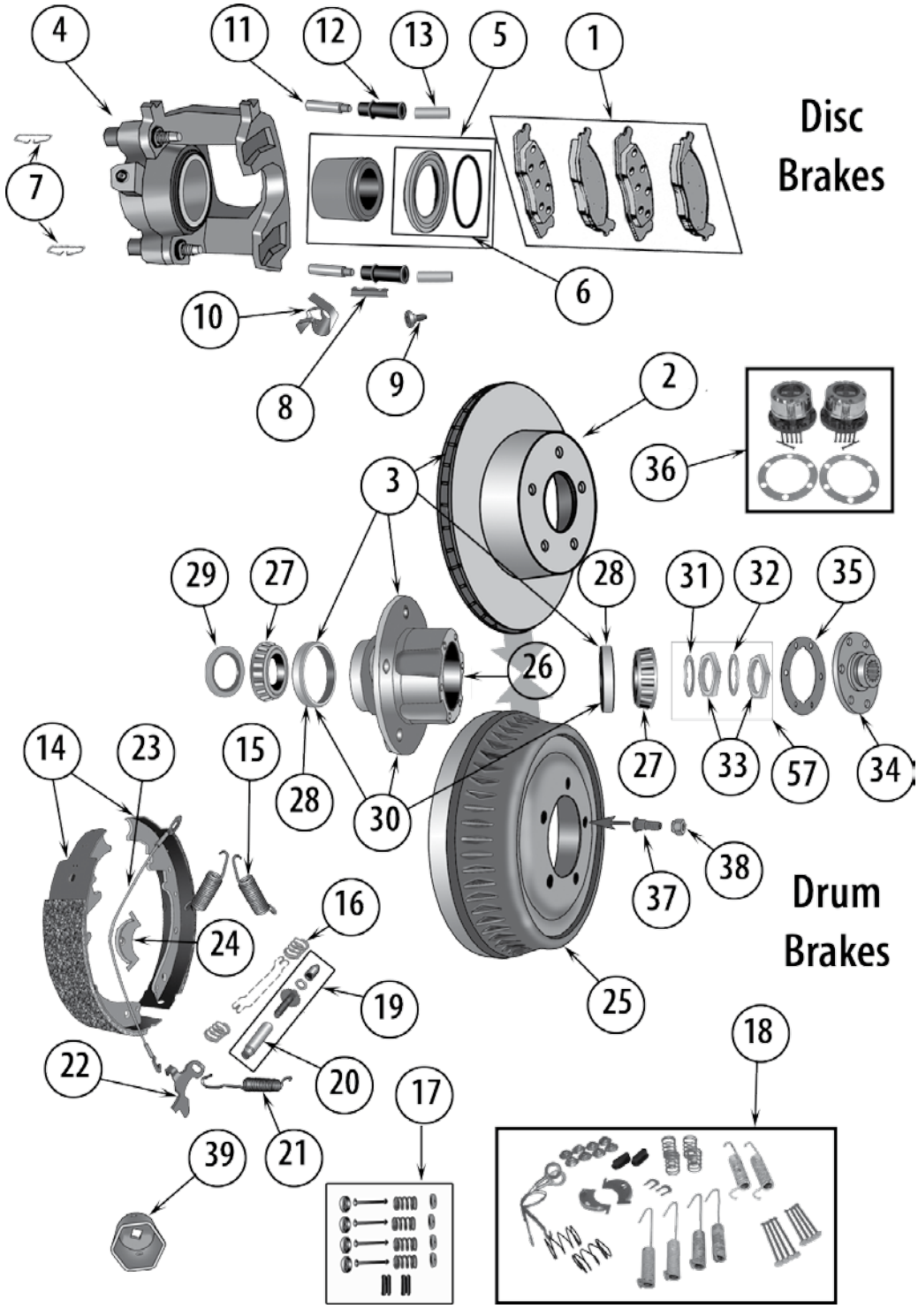

Copyright © 2014 Crown Automotive Sales Co., Inc. All rights reserved.

1976-1986 CJ-7 • 1981-1986 CJ-8

Item #	Decription	Application	Size	Location	Comments	Replaces Part #
FRONT DISC BRAKES						
1	Pad Set	1976-78 1978-81 1982-86			w/ 6-Bolt Caliper Brackets w/ 2-Bolt Caliper Brackets	J8126314 J8131785 83501167
2	Rotor Only	1978-86	7/8″ Thick		w/ 2-Bolt Caliper Plate	5363421R
3	Hub & Rotor Assembly	1978-81 1981-86	7/8″ Thick 7/8″ Thick		w/ 6-Bolt Flange Mounting w/ 5-Bolt Flange Mounting	J5358568 J5363421
4	Caliper Assembly	1978-81 1978-81 1982-86 1982-86		Right Left Right Left	Less Pads Less Pads Less Pads Less Pads	J8131649 J8131648 J8133846 J8133847
5	Piston Kit, Caliper	1978-81 1982-86			Includes 1 Piston, 1 Seal, & 1 Boot Includes 1 Piston, 1 Seal, & 1 Boot	J8127582 J8133845
6	Seal Kit, Caliper	1978-81 1982-86			Includes 1 Seal & 1 Boot Includes 1 Seal & 1 Boot	J8127583 J8133852
7	Spring, Caliper Support	1976-78 1982-86			w/ 6-Bolt Caliper Brackets; 4 Required Anti-Rattle Clip; 4 Required	J3223413 J3239865
8	Key, Caliper Support	1976-78			w/ 6-Bolt Caliper Brackets	J3223414
9	Screw, Caliper Support	1976-81				J3223416
10	Clip, Caliper Support	1978-81				J3229033
11	Pin, Caliper	1982-86				83504655
12	Sleeve, Caliper Pin	1982-86			Inner	52001701
13	Bushing, Caliper Pin	1982-86			Outer	J3239867
FRONT & REAR DRUM BRAKES						
14	Shoe & Lining Set	1976-78 1978-86	11″ x 2″ 10″ x 1-3/4″	Front or Rear Rear		J8130067 J8133818
15	Spring, Brake Shoe Return	1976-78	11″ x 2″	Front or Rear	Upper; 2 Required Per Wheel	J0937953
16	Spring, Parking Brake Lever Strut	1976-78	11″ x 2″	Rear		83504310
17	Hold Down Kit, Brake Shoe	1976-78	11″ x 2″	Front or Rear		J0937952
18	Small Parts Master Kit	1978-86 1986	10″ x 1-3/4″ 10″ x 1-3/4″	Rear Rear	w/ AMC 20 w/ Dana 44	4636777 4636778
19	Adjuster Kit, Brake Shoe	1976-78 1976-78 1978-86 1978-86	11″ x 2″ 11″ x 2″ 10″ x 1-3/4″ 10″ x 1-3/4″	Left Front or Rear Right Front or Rear Left Rear Right Rear		943131A 943132A 52001216 52001215
20	Nut, Brake Shoe Adjusting	1976-78	11″ x 2″	Front or Rear Left		J0998350

Continued on next page

Copyright © 2014 Crown Automotive Sales Co., Inc. All rights reserved.

1976-1986 CJ-7 (Continued)
1981-1986 CJ-8

1976-1978 - 11" x 2" Bendix Screw Adjusting	Front or Rear
1976-1978 - 11-3/4" x 1-1/8" Disc Brake	Front
1978-1983 - 11-3/4" x 7/8" Disc Brake	Front
1978-1983 - 10" x 1-3/4" Screw Adjusting	Rear

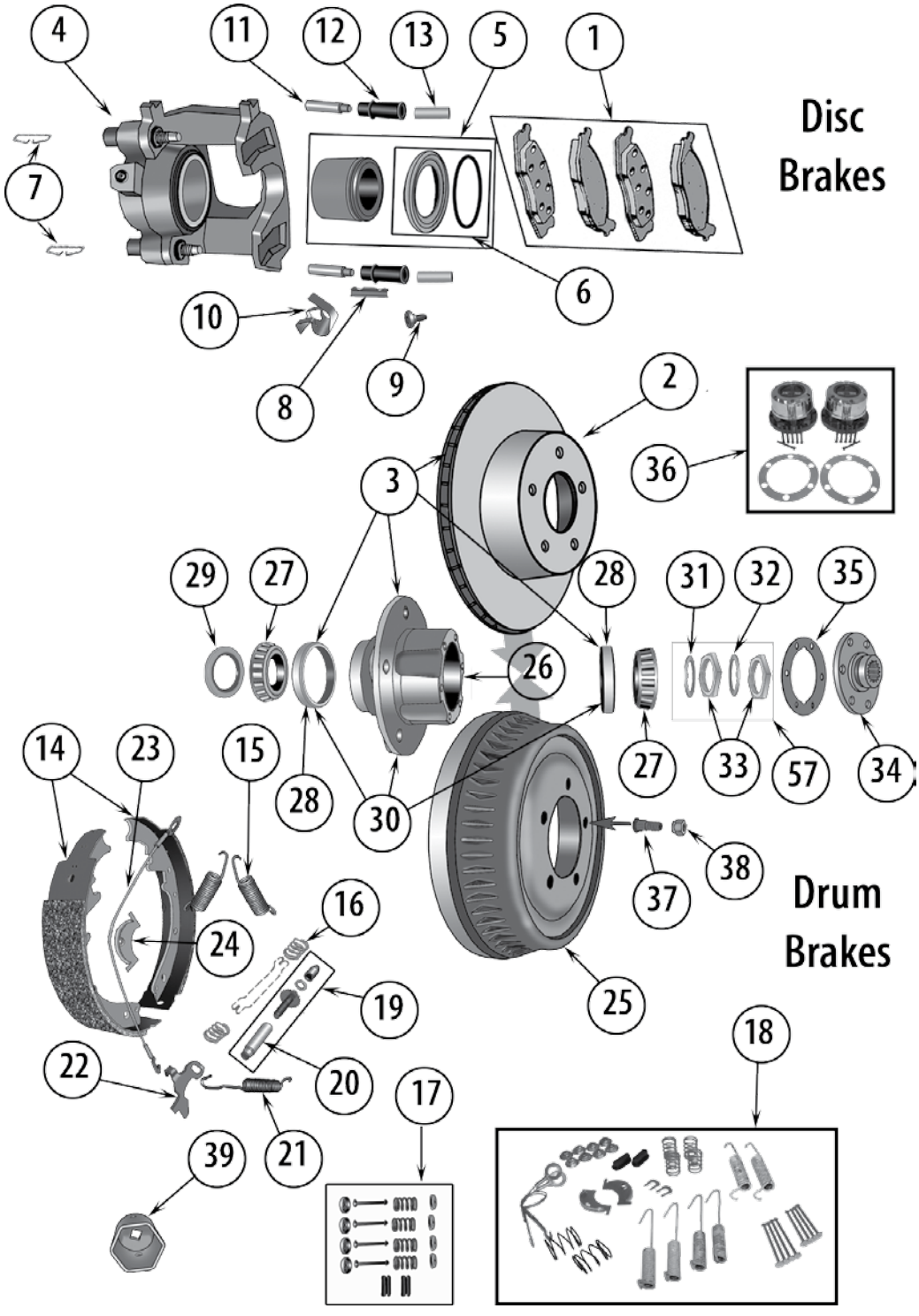

Copyright © 2014 Crown Automotive Sales Co., Inc. All rights reserved.

1976-1986 CJ-7 • 1981-1986 CJ-8 (Continued)

Item #	Decription	Application	Size	Location	Comments	Replaces Part #
21	Spring, Adjusting Screw	1976-78	11″ x 2″	Front or Rear		J0943136
22	Lever, Automatic Adjust	1976-78 1976-78	11″ x 2″ 11″ x 2″	Left Front or Rear Right Front or Rear		J0943140 J0943141
23	Cable, Automatic Adjust	1976-78	11″ x 2″	Front or Rear		J0943138
24	Guide, Automatic Adjust Cable	1976-78	11″ x 2″	Front or Rear		J3201947
25	Drum	1976-78 1978-86	11″ x 2″ 10″ x 1-3/4″	Front or Rear Rear	Finned	J5352476 52002952
HUBS, Etc.						
26	Hub	1976 1976 1977-78 1978-81 1981-86 1976-86	All All All Disc Disc All	Front Front Front Front Front Rear	Includes Cups and Wheel Studs w/ 1-3/4″ Inner Wheel Bearing Cup Includes Cups and Wheel Studs w/ 6-Bolt Flange Mounting w/ 5-Bolt Flange Mounting w/ AMC 20 Axle	J8136650 J8136651 J8136651 5358568H 5363421H J8133730
27	Bearing, Wheel	1976 1976-86 1976-86	All All All	Front Inner Front Inner Front Outer	w/ 1-5/8″ O.D. Cup- LM-501349 w/ 1-3/4″ O.D. Cup- LM-120949 w/ 1-5/8″ O.D. Cup- LM-501349	J3156052 J5356661 J3156052
28	Cup, Wheel Bearing	1976 1976-86 1976-86	All All All	Front Inner Front Inner Front Outer	1-5/8″ O.D. - LM-501349 1-3/4″ O.D. - LM-120949 1-5/8″ O.D. - LM-501349	J0925447 J8127630 J0925447
29	Seal, Hub	1976 1976-86	All All	Front Front	Used w/ 1-5/8″ O.D. Cup Used w/ 1-3/4″ O.D. Cup	J0938151 J5365082
30	Hub & Drum Assembly	1976-78	11″ x 2″	Rear	w/ AMC 20 Axle	J5355714
31	Lock Washer, Wheel Bearing	1976-78	All	Front Inner		JA000865
32	Lock Washer, Wheel Bearing	1976-78	All	Front Outer		JA000867
33	Nut, Axle Bearing	1976-78	All	Front	2 Required Per Wheel	JA000866
34	Flange, Front Hub	1976-81 1981-86	All All	Front Front	w/ 6 Bolts w/ 5 Bolts	J0999396 J5362000
35	Gasket, Hub Flange	1976-81 1981-86	All All	Front Front	w/ 6 Bolts w/ 5 Bolts	J0649784 J5362001
36	Manual Locking Hub Set	1976-81 1981-86	All All	Front Front	w/ 6 Bolts w/ 5 Bolts	400502 400526
37	Stud, Wheel	1976-78 1977-86 1976-86	Drum Disc All	Front Front Rear		J5353025 J5357196 J5355719
38	Wheel Nut	1976-86 1977-86	All All	Front or Rear Front or Rear	Right Hand Threads; Open-Ended; 1/2″-20 Right Hand Threads; Chrome Capped; 1/2″-20	J0635516 J4005694
39	Socket, Spindle Nut	All	All	Front		A692N

Continued on next page

Copyright © 2014 Crown Automotive Sales Co., Inc. All rights reserved.

1976-1986 CJ-7 (Continued)
1981-1986 CJ-8

1976-1978 - 11" x 2" Bendix Screw Adjusting Front or Rear
1976-1978 - 11-3/4" x 1-1/8" Disc Brake Front
1978-1983 - 11-3/4" x 7/8" Disc Brake Front
1978-1983 - 10" x 1-3/4" Screw Adjusting Rear

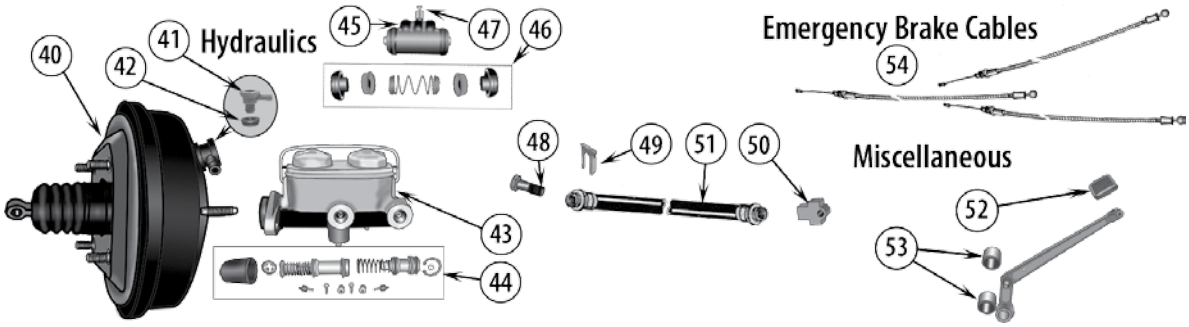

Item #	Decription	Application	Size	Location	Comments	Replaces Part #
HYDRAULICS						
40	Booster, Brake	1982-86			Includes Boot	J8133909
41	Valve, Brake Booster Check	1982-86			w/ Power Brakes	J4487455
42	Grommet, Brake Check Valve	1982-86			w/ Power Brakes	4723640
43	Master Cylinder	1976 1977-78 1977-78 1978-86 1977-78 1978-86	 Drum Disc Disc Disc Disc		 w/o Power Brakes w/o Power Brakes w/ 6-Bolt Caliper Brackets w/o Power Brakes w/ 2-Bolt Caliper Brackets w/ Power Brakes w/ 6-Bolt Caliper Brackets w/ Power Brakes w/ 2-Bolt Caliper Brackets	J8127792 J8127792 83300115 J8134270 J8127821 83300111
44	Repair Kit, Master Cylinder	1976 1977-78 1978-86 1978-86	 Drum Disc Disc		 w/o Power Brakes w/ Power Brakes w/ 2-Bolt Caliper Brackets w/o Power Brakes w/ 2-Bolt Caliper Brackets	J8127772 J8127772 J8134247 J8134266
45	Wheel Cylinder	1976-78 1976-78 1976-78 1976-78 1978-86 1978-86	11" x 2" 11" x 2" 11" x 2" 11" x 2" 10" x 1-3/4" 10" x 1-3/4"	Front Left Front Right Left Rear Right Rear Left Rear Right Rear	1-1/8" Bore 1-1/8" Bore 7/8" Bore 7/8" Bore 7/8" Bore 7/8" Bore	J8126766 J8126692 52000849 52000848 52000849 52000848
46	Repair Kit, Wheel Cylinder	1976-78 1976-78 1976-78 1976-78 1978-86	11" x 2" 11" x 2" 11" x 2" 11" x 2" 10" x 1-3/4"	Front Rear Rear Rear Rear	1-1/8" Bore 7/8" Bore 15/16" Bore 1" Bore 7/8" Bre	J8126753 83500987 J8125880 8126964 83500987
47	Screw, Bleeder	1978-86 1978-86	Disc	Front Rear		J8129722 J8129722
48	Bolt, Hose Inlet	1982-86	Disc	Front		6035911AA
49	Clip, Brake Hose	All	All	All		J0637427
50	Brake Tee	1976-78	11" x 2"	Front or Rear	Mounts to Axle	J0637432

Copyright © 2014 Crown Automotive Sales Co., Inc. All rights reserved.

1976-1986 CJ-7 • 1981-1986 CJ-8 (Continued)

Item #	Decription	Application	Size	Location	Comments	Replaces Part #
51	Brake Hose	1976-78	11″ x 2″	Front Center	Frame to Axle; 15″ Long	J5356054
		1978-81	Disc	Front Left or Right	Square End Hose; Frame to Caliper	J5359037
		1982-86	Disc	Front Left	Frame to Caliper	J5363908
		1982-86	Disc	Front Right	Frame to Caliper	J5363756
		1976-78	11″ x 2″	Rear Center	Frame to Axle; 17-3/4″ Long	J5359570
		1978-86	10″ x 1-3/4″	Rear Center	Frame to Axle; 17-3/4″ Long	J5362842
MISCELLANEOUS						
52	Pad, Brake Pedal	1976-86	All		w/ Manual Transmission; Rubber	J5363508
53	Bushing, Brake Pedal	1976-86			Bronze	J0946177
EMERGENCY BRAKE						
54	Cable, Parking Brake	1976-86 CJ-7	10″ x 1-3/4″	Front	Pedal to Equalizer; 61-3/4″ Long	J5353238
		1981-83 CJ-8	10″ x 1-3/4″	Front	Pedal to Equalizer; 71-5/8″ Long	J5355286
		1976-78 CJ-7	11″ x 2″	Left Rear	Equalizer to Wheels; Bolt-On; 30.5″	J5355325
		1976-78 CJ-7	11″ x 2″	Right Rear	Long	
		1978-80 CJ-7	10″ x 1-3/4″	Left Rear	Equalizer to Wheels; Bolt-On; 62″ Long	J5355324
		1981-86 CJ-7, 8	10″ x 1-3/4″	Left Rear	Equalizer to Wheels; 31-1/4″ Long	J3233903
		1978-80 CJ-7	10″ x 1-3/4″	Right Rear	Equalizer to Wheels; 33-5/8″ Long	J3242203
		1981-86 CJ-7, 8	10″ x 1-3/4″	Right Rear	Equalizer to Wheels; 60-1/2″ Long	J3233904
					Equalizer to Wheels; 61-1/4″ Long	J3239949
CROWN KITS						
55	Stainless Steel Brake Hose Kit	1982-86		Front & Rear	w/ 0" to 4" of Lift	7405
56	Wheel Bearing Kit	1976-86	Disc	Front	Includes Bearings & Seals	5356661K
57	Washer & Nut Kit, Spindle	1976-86		Front	Includes 2 Spindle Nuts and 2 Washers	A867K
58	Axle Nut Kit	1976-86		Rear	w/ AMC 20 Axle; Includes 1 Nut, 1 Washer & 1 Key	3155675K
59	Hub Kit	1976-86		Rear	w/ AMC 20 Axle; Includes Bearings, Seals, & Hardware	8133730K
60	Pad Set Master Kit	1982-86		Front	Includes Pads, Bushings, Clips, & Bolts	83501167MK
61	Shoe Set Master Kit	1982-86	10" x 1-3/4"	Rear	Includes Shoe Set & Hardware	8133818MK
62	Shoe Set Master Kit	1986	10" x 1-3/4"	Rear	Includes Shoe Set & Hardware	8133818MK44
63	Brake Drum Service Kit	1976-78	11″ x 2″	Front or Rear	Includes 2 Drums, Shoe Set, and Hardware	5352476K
64	Brake Drum Service Kit	1978-86	10″ x 1-3/4″	Rear	Includes 2 Drums, Shoe Set, and Hardware	52002952K
65	Disc Brake Service Kit	1976-78	Disc	Front	w/ 6-Bolt Caliper Brackets	5356183RK
66	Disc Brake Service Kit	1978-81	Disc	Front	w/ 6-Bolt Flange Mounting w/ 2-Bolt Caliper Brackets	5358568RK
67	Disc Brake Service Kit	1982-86	Disc	Front	w/ 5-Bolt Flange Mounting	5363421RK

55
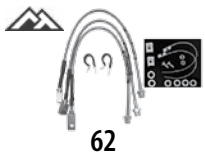
56

57

58

59

60

61

62

63

64

65

66

67

Copyright © 2014 Crown Automotive Sales Co., Inc. All rights reserved.

1956-1964 FC-150
1957-1964 FC-170

11 x 2 Eccentric Adjusting - Front or Rear

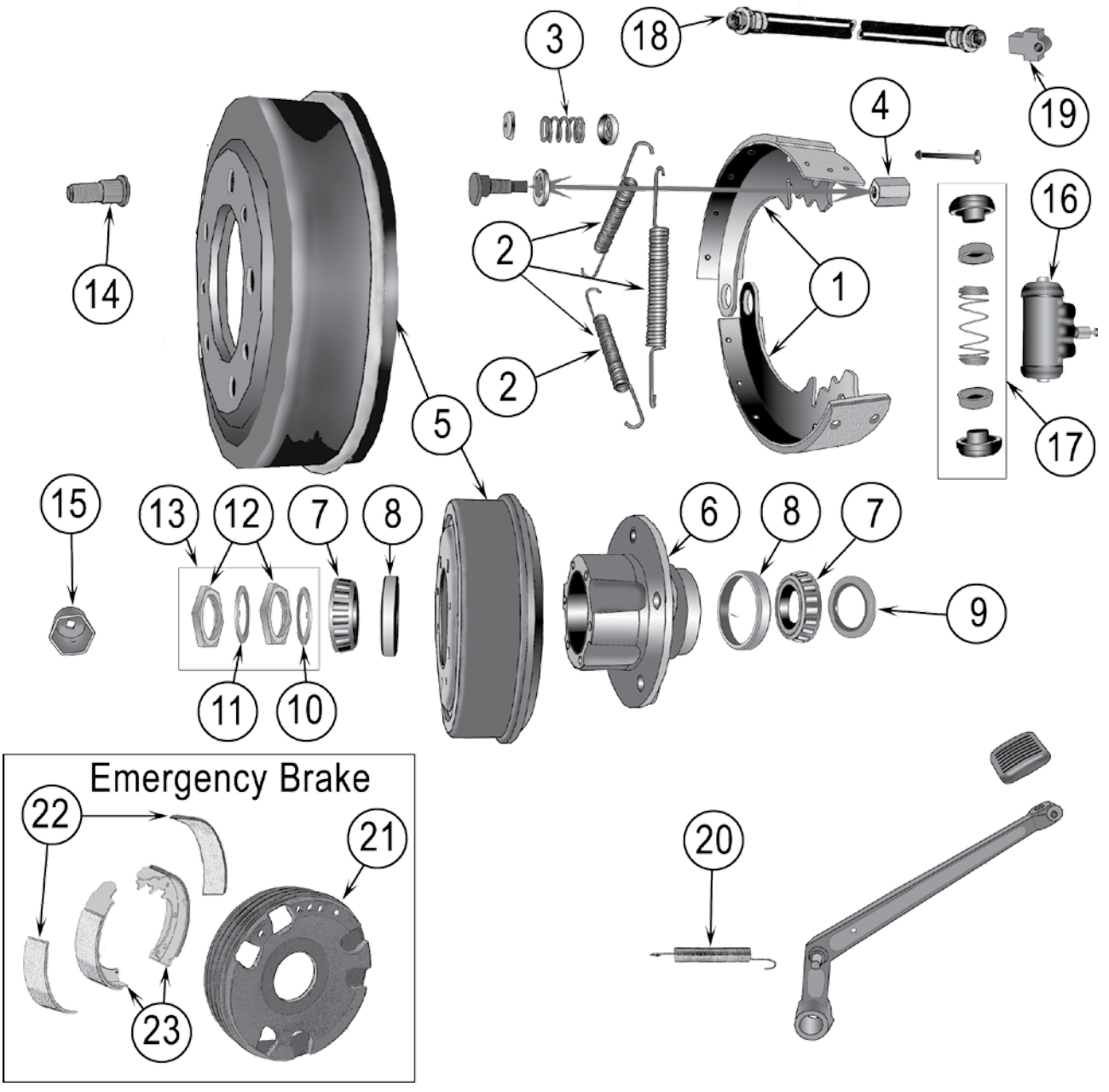

Copyright © 2014 Crown Automotive Sales Co., Inc. All rights reserved.

1956-1964 FC-150 • 1957-1964 FC-170

Item #	Decription	Application	Size	Location	Comments	Replaces Part #
FRONT & REAR DRUM BRAKES						
1	Shoe & Lining Set	All	11″ x 2″	Front or Rear		8126685
2	Spring, Brake Shoe Return	All All	11″ x 2″ 11″ x 2″	Front or Rear Front or Rear	Upper Lower	J0924057 J0909889
3	Spring, Brake Shoe Hold Down	All	11″ x 2″	Front or Rear	2 Required Per Wheel	J0641997
4	Nut, Brake Shoe Eccentric	All	11″ x 2″	Front or Rear	2 Required Per Wheel	J0648348
5	Drum	All	11″ x 2″	Front or Rear		J0941877
HUBS, Etc.						
6	Hub	All	11″ x 2″	Rear	w/ Dana 44 Rear Axle w/ Tapered Axle Shafts	J0811351
7	Bearing, Wheel	All All All	11″ x 2″ 11″ x 2″ 11″ x 2″	Front Inner or Outer Front Inner Front Outer	w/ Bearing Marked 18590 w/ Bearing Marked LM-501349 w/ Bearing Marked LM-501349	J0052942 J3105346 J3156052
8	Cup, Wheel Bearing	All All All	11″ x 2″ 11″ x 2″ 11″ x 2″	Front Inner or Outer Front Inner Front Outer	w/ Bearing Marked 18590 w/ Bearing Marked LM-501349 w/ Bearing Marked LM-501349	J0052943 917773* J0925447
9	Seal, Hub	All All	11″ x 2″ 11″ x 2″	Front Front	w/ Bearing Marked 18590 w/ Bearing Marked LM-501349	J0805150 J0938151
10	Lock Washer, Wheel Bearing	All	11″ x 2″	Front Inner		JA000865
11	Lock Washer, Wheel Bearing	All	11″ x 2″	Front Outer		JA000867
12	Nut, Axle Bearing	All	11″ x 2″	Front	2 Required Per Wheel	JA000866
13	Washer & Nut Kit, Spindle	All	11″ x 2″	Front	Includes 2 Spindle Nuts and 2 Washers	A867K
14	Stud, Wheel	All All All All All	11″ x 2″ 11″ x 2″ 11″ x 2″ 11″ x 2″ 11″ x 2″	Front Front Front Rear Rear	w/ Bearing Marked 18590; Left Hand Threads w/ Bearing Marked 18590; Right Hand Threads w/ Bearing Marked LM-501349; Right Hand Threads w/ Dana 44 Rear Axle w/ Tapered Axle Shafts; Left Hand Threads w/ Dana 44 Rear Axle w/ Tapered Axle Shafts; Right Hand Threads	JA000473 A474 J0945451 JA000473 A474
15	Socket, Spindle Nut	All	11″ x 2″	Front		A692N
HYDRAULICS						
16	Wheel Cylinder	All All All All	11″ x 2″ 11″ x 2″ 11″ x 2″ 11″ x 2″	Front Left Front Right Rear Left Rear Right	1-1/8″ Bore 1-1/8″ Bore 1″ Bore 1″ Bore	J8126741 J0649948 J0802951 649941
17	Repair Kit, Wheel Cylinder	All	11″ x 2″	Rear	1″ Bore	J0115962
18	Brake Hose	FC-150 FC-150 FC-170	11″ x 2″ 11″ x 2″ 11″ x 2″	Front Center Rear Center Front or Rear Center	Frame to Axle; 12″ Long Frame to Axle; 16″ Long Frame to Axle; 19-1/8″ Long	J0800896 J0937884 J0991360
19	Brake Tee	All	11″ x 2″	Front or Rear	Mounts to Axle	J0637432
MISCELLANEOUS						
20	Spring, Brake Pedal Return	All	11″ x 2″			J0641723
EMERGENCY BRAKE						
21	Drum, Emergency Brake	All				A9332
22	Lining Kit, Emergency Brake	All				116712*
23	Shoe Set, Emergency Brake	All				J0643055

*Not Currently Available

Copyright © 2014 Crown Automotive Sales Co., Inc. All rights reserved.

1966-1971 C101 Commando
1972-1973 C104 Commando

C101 - 10" x 2" Screw Adjusting Front or Rear
C104 - 11" x 2" Bendix Screw Adjusting Front or Rear

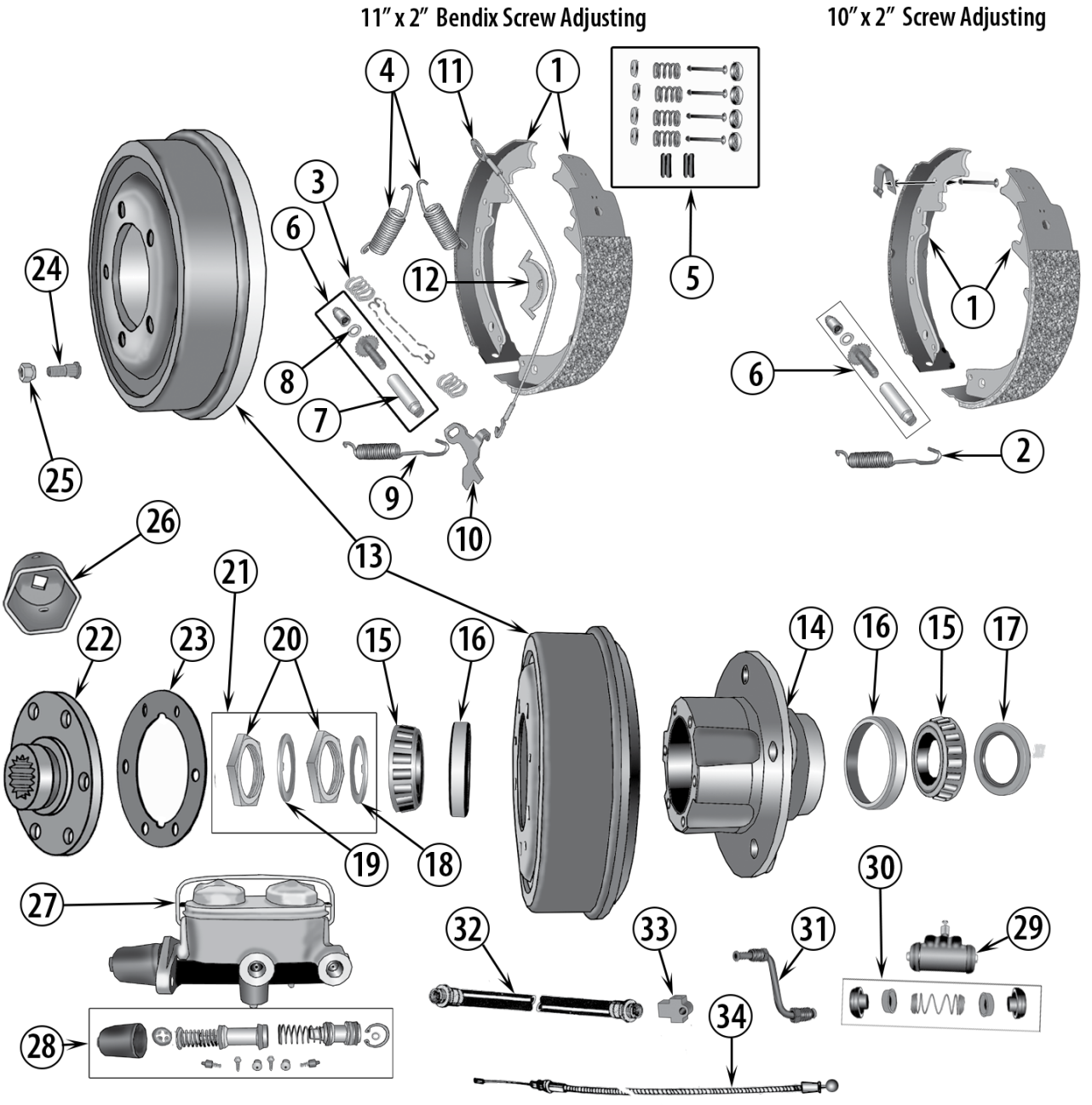

Item #	Decription	Application	Size	Location	Comments	Replaces Part #
FRONT & REAR DRUM BRAKES						
1	Shoe & Lining Set	C101 C104	10" x 2" 11" x 2"	Front or Rear Front or Rear		J8120393 J8130067
2	Spring, Brake Shoe Return	C101 C104	10" x 2" 11" x 2"	Front or Rear Front or Rear	 Upper; 2 Required Per Wheel	J0938111 J0937953
3	Spring, Parking Brake Lever Strut	C104	11" x 2"	Rear		83504310
4	Spring, Brake Shoe Hold Down	C101	10" x 2"	Front or Rear		J0938110
5	Hold Down Kit, Brake Shoe	C104	11" x 2"	Front or Rear		J0937952

Copyright © 2014 Crown Automotive Sales Co., Inc. All rights reserved.

1966-1971 C101 Commando • 1972-1973 C104 Commando

Item #	Decription	Application	Size	Location	Comments	Replaces Part #
6	Adjuster Kit, Brake Shoe	C101	10″ x 2″	Left Front		52001215
		C101	10″ x 2″	Right Front		52001216
		C101	10″ x 2″	Left Rear		52001216
		C101	10″ x 2″	Right Rear		52001215
		C104	11″ x 2″	Left Front or Rear		943131A
		C104	11″ x 2″	Right Front or Rear		943132A
7	Nut, Brake Shoe Adjusting	C104	11″ x 2″	Front or Rear Left		J0998350
8	Washer, Brake Shoe Adjusting	C104	11″ x 2″	Front or Rear		J0998354
9	Spring, Adjusting Screw	C101	10″ x 2″	Front or Rear		J0945306
		C104	11″ x 2″	Front or Rear		J0943136
10	Lever, Automatic Adjust	C104	11″ x 2″	Left Front or Rear		J0943140
		C104	11″ x 2″	Right Front or Rear		J0943141
11	Cable, Automatic Adjust	C104	11″ x 2″	Front or Rear		J0943138
12	Guide, Automatic Adjust Cable	C104	11″ x 2″	Front or Rear		J3201947
13	Drum	C101	10″ x 2″	Front or Rear		J0994306
HUBS, Etc.						
14	Hub	C101, C104	All	Front		J8136650
15	Bearing, Wheel	C101, C104	All	Front Inner or Outer		J3156052
16	Cup, Wheel Bearing	C101, C104	All	Front Inner or Outer		J0925447
17	Seal, Hub	C101, C104	All	Front		J0938151
18	Lock Washer, Wheel Bearing	C101, C104	All	Front Inner		JA000865
19	Lock Washer, Wheel Bearing	C101, C104	All	Front Outer		JA000867
20	Nut, Axle Bearing	C101, C104	All	Front	2 Required Per Wheel	JA000866
21	Washer & Nut Kit, Spindle	C101, C104		Front	Includes 2 Spindle Nuts and 2 Washers	A867K
22	Flange, Front Hub	C104	All	Front	w/ 6 Bolts	J0999396
23	Gasket, Hub Flange	C101, C104	All	Front	w/ 6 Bolts	J0649784
24	Stud, Wheel	C101	All	Front		J0945451
		C101	All	Rear	w/ Tapered Axle Shafts; Left Hand Threads	JA000473
		C101	All	Rear	w/ Tapered Axle Shafts; Right Hand Threads	J5353025
		C101, C104	All	Rear	w/ Flanged Axle Shafts	J5355719
25	Wheel Nut	C101, C104	All	Front or Rear	Right Hand Threads; Open-Ended; 1/2″-20	J0635516
		C101	All	Front or Rear	Left Hand Threads; Open-Ended; 1/2″-20	J0636035
26	Socket, Spindle Nut	All	All	Front		A692N
HYDRAULICS						
27	Master Cylinder	C104	11″ x 2″			J8126737
28	Repair Kit, Master Cylinder	C104	11″ x 2″			J8126747
29	Wheel Cylinder	C101	10″ x 2″	Front Left or Right	1″ Bore	J0938115
		C101	10″ x 2″	Front Left or Right	1-1/8″ Bore	J0991526
		C101	10″ x 2″	Left Rear	13/16″ Bore	J8126744
		C101	10″ x 2″	Right Rear	13/16″ Bore	J8136612
		C104	11″ x 2″	Left Rear	15/16″ Bore	J8126775
		C104	11″ x 2″	Right Rear	15/16″ Bore	J8124799
30	Repair Kit, Wheel Cylinder	C101	10″ x 2″	Front	1″ Bore	J8126751
		C101, C104	All	Front	1-1/8″ Bore	J8126753
		C101	10″ x 2″	Rear	1″ Bore	J8126751
		C104	11″ x 2″	Rear	7/8″ Bore	83500987
		C104	11″ x 2″	Rear	15/16″ Bore	J8125880
		C104	11″ x 2″	Rear	1″ Bore	8126964
31	Brake Tube	C101	10″ x 2″	Front Left or Right		J0937325
32	Brake Hose	C101	10″ x 2″	Front Center	Frame to Axle	J0937347
		C104	11″ x 2″	Front Center	Frame to Axle; 15″ Long	J5350663
33	Brake Tee	C101, C104	All	Front or Rear	Mounts to Axle	J0637432
PARKING BRAKE						
34	Cable, Parking Brake	C104	11″ x 2″	Front	w/ Automatic Transmission; Pedal to Equalizer	J0999898
		C104	11″ x 2″	Rear	Equalizer to Wheels; 107″ Long	J0999895

Copyright © 2014 Crown Automotive Sales Co., Inc. All rights reserved.

1947-1965 Pickup (PU)
1948-1963 Sedan Delivery (SD)
1946-1964 Station Wagon (SW)
1948-1950 VJ Jeepster

SD, SW, VJ - 10" x 1-3/4" Eccentric Adjusting Front or Rear
PU, SW, SD - 11" x 2" Eccentric Adjusting Front or Rear

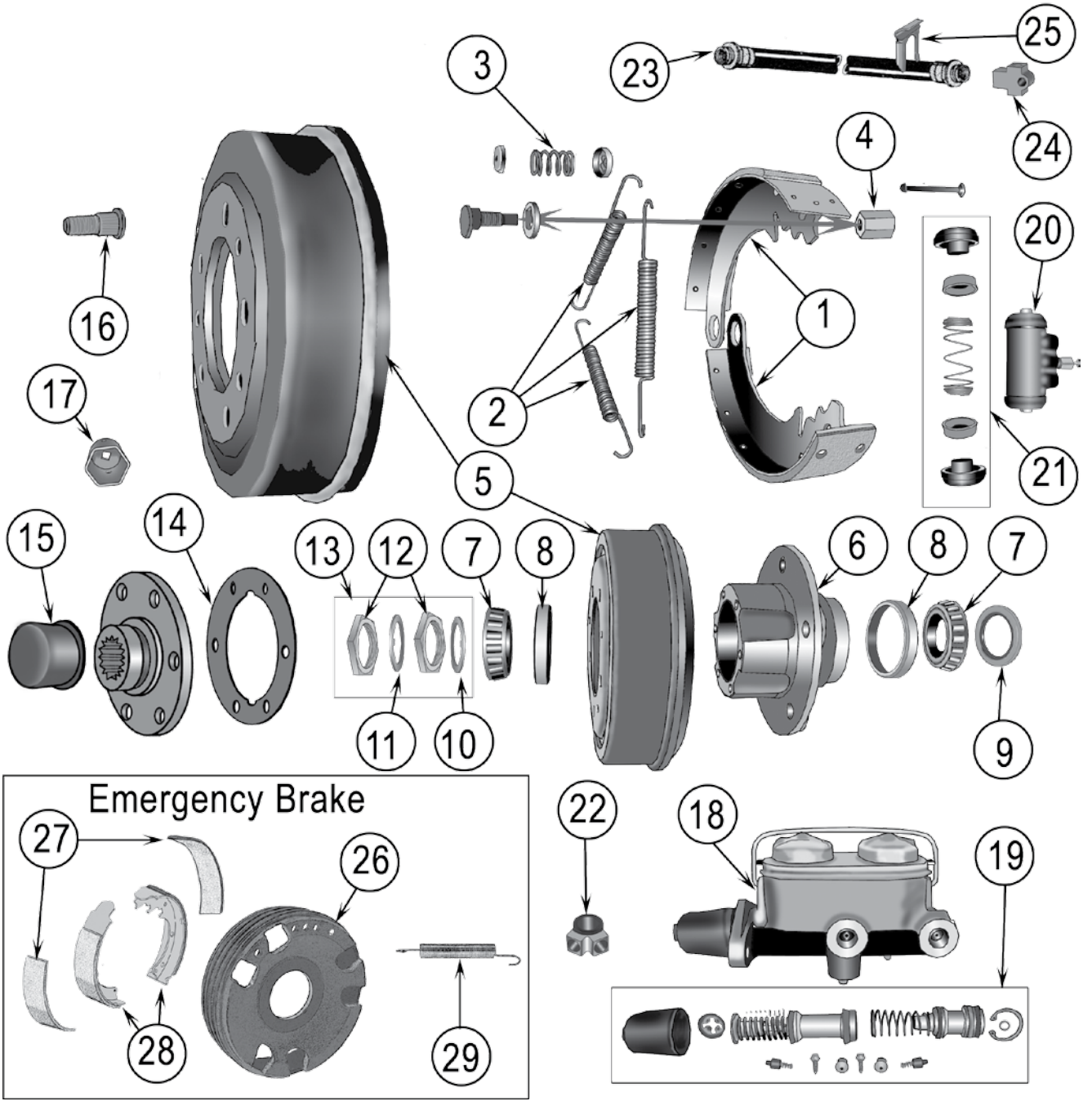

Copyright © 2014 Crown Automotive Sales Co., Inc. All rights reserved.

1947-1965 Pickup (PU) • 1948-1963 Sedan Delivery (SD)
1946-1964 Station Wagon (SW) • 1948-1950 VJ Jeepster

Item #	Decription	Application	Size	Location	Comments	Replaces Part #
FRONT & REAR DRUM BRAKES						
1	Shoe & Lining Set	PU, SW, SD	11" x 2"	Front or Rear		8126685
2	Spring, Brake Shoe Return	PU, SW, SD PU, SW, SD	11" x 2" 11" x 2"	Front or Rear Front or Rear	Upper Lower	J0924057 J0909889
3	Spring, Brake Shoe Hold Down	PU, SW, SD	11" x 2"	Front or Rear	2 Required Per Wheel	J0641997
4	Nut, Brake Shoe Eccentric	PU, SW, SD	11" x 2"	Front or Rear	2 Required Per Wheel	J0648348
5	Drum	PU, SW, SD	11" x 2"	Front or Rear		J0941877
HUBS, Etc.						
6	Hub	PU, SD, SW PU, SD, SW SW, SD PU	All All All All	Front Front Rear Rear	w/ Bearing Marked 18590 w/ Bearing Marked LM-501349 w/ Dana 44 Rear Axle w/ Dana 53 Rear Axle	J0909548 J8136650 J0811351 J0912647
7	Bearing, Wheel	PU, SD, SW PU, SD, SW	All All	Front Inner or Outer Front Inner or Outer	w/ Bearing Marked 18590 w/ Bearing Marked LM-501349	J0052942 J3156052
8	Cup, Wheel Bearing	PU, SD, SW PU, SD, SW	All All	Front Inner or Outer Front Inner or Outer	w/ Bearing Marked 18590 w/ Bearing Marked LM-501349	J0052943 J0925447
9	Seal, Hub	PU, SD, SW PU, SD, SW	All All	Front Front	w/ Bearing Marked 18590 w/ Bearing Marked LM-501349	J0805150 J0938151
10	Lock Washer, Wheel Bearing	PU, SD, SW	All	Front Inner		JA000865
11	Lock Washer, Wheel Bearing	PU, SD, SW	All	Front Outer		JA000867
12	Nut, Axle Bearing	PU, SD, SW	All	Front	2 Required Per Wheel	JA000866
13	Washer & Nut Kit, Spindle	PU, SD, SW	All	Front	Includes 2 Spindle Nuts and 2 Washers	A867K
14	Gasket, Hub Flange	PU, SD, SW	All	Front		J0649784
15	Dust Cap	PU, SD, SW	All	Front	w/ Dana 25 w/ Bearing Marked 18590	J5362283
16	Stud, Wheel	PU, SD, SW PU, SD, SW PU, SD, SW PU, SD, SW	All All All All	Front Front Rear Rear	w/ Bearing Marked 18590; Left Hand Threads w/ Bearing Marked 18590; Right Hand Threads w/ Dana 44 Rear Axle w/ Tapered Axle Shafts; Left Hand Threads w/ Dana 44 Rear Axle w/ Tapered Axle Shafts; Right Hand Threads	JA000473 A474 JA000473 A474
17	Socket, Spindle Nut	PU, SD, SW	All	Front		A692N
HYDRAULICS						
18	Master Cylinder	SW, SD, VJ PU PU	All All All		Single Reservoir w/o 6-230 Engine; Single Reservoir w/ 6-230 Engine	J8136618 J8136618 932829
19	Repair Kit, Master Cylinder	SW, SD, VJ PU PU	All All All		 w/o 6-230 Engine w/ 6-230 Engine	805654 805654 J0932833
20	Wheel Cylinder	PU, SW, SD PU, SW, SD PU, SW, SD PU, SW, SD	11" x 2" 11" x 2" 11" x 2" 11" x 2"	Front Left Front Right Rear Left Rear Right	1-1/8" Bore 1-1/8" Bore 1" Bore 1" Bore	J8126741 J0649948 J0802951 649941
21	Repair Kit, Wheel Cylinder	PU, SW, SD	11" x 2"	Rear	1" Bore	J0115962
22	Fitting, Master Cylinder	PU, SW, SD, VJ	All		"Y" Fitting	637603*
23	Brake Hose	PU, SW, SD, VJ	All	Front or Rear	15-1/2" Long	J0645544
24	Brake Tee	PU, SW, SD, VJ	All	Front or Rear	Mounts to Axle	J0637432
25	Clip, Brake Hose	PU, SW, SD, VJ	All	Front or Rear		J0637427
EMERGENCY BRAKE						
26	Drum, Emergency Brake	PU, SW, SD			w/ Transfer Case Brake	A9332
27	Lining Kit, Emergency Brake	PU, SW, SD			w/ Transfer Case Brake	116712*
28	Shoe Set, Emergency Brake	PU, SW, SD			w/ Transfer Case Brake	J0643055
29	Spring, Emergency Brake Return	PU, SW, SD			w/ Transfer Case Brake	J0641727

*Not Currently Available

Copyright © 2014 Crown Automotive Sales Co., Inc. All rights reserved.

1963-1991 SJ
1963-1988 J-Series

1963-1973 SJ, J-Series	11" x 2" Bendix Screw Adjusting	Front or Rear
1963-1973 J-Series	12" x 2" Screw Adjusting	Rear
1974-1991 SJ, J-Series	11" x 2" Delco Screw Adjusting	Rear
1979-1988 J-Series	12" x 2-1/2" Screw Adjusting	Rear
1974-1991 SJ, J-Series	11-7/8" Disc Brake	Front
1979-1988 J-Series	12-1/2" Disc Brake	Front

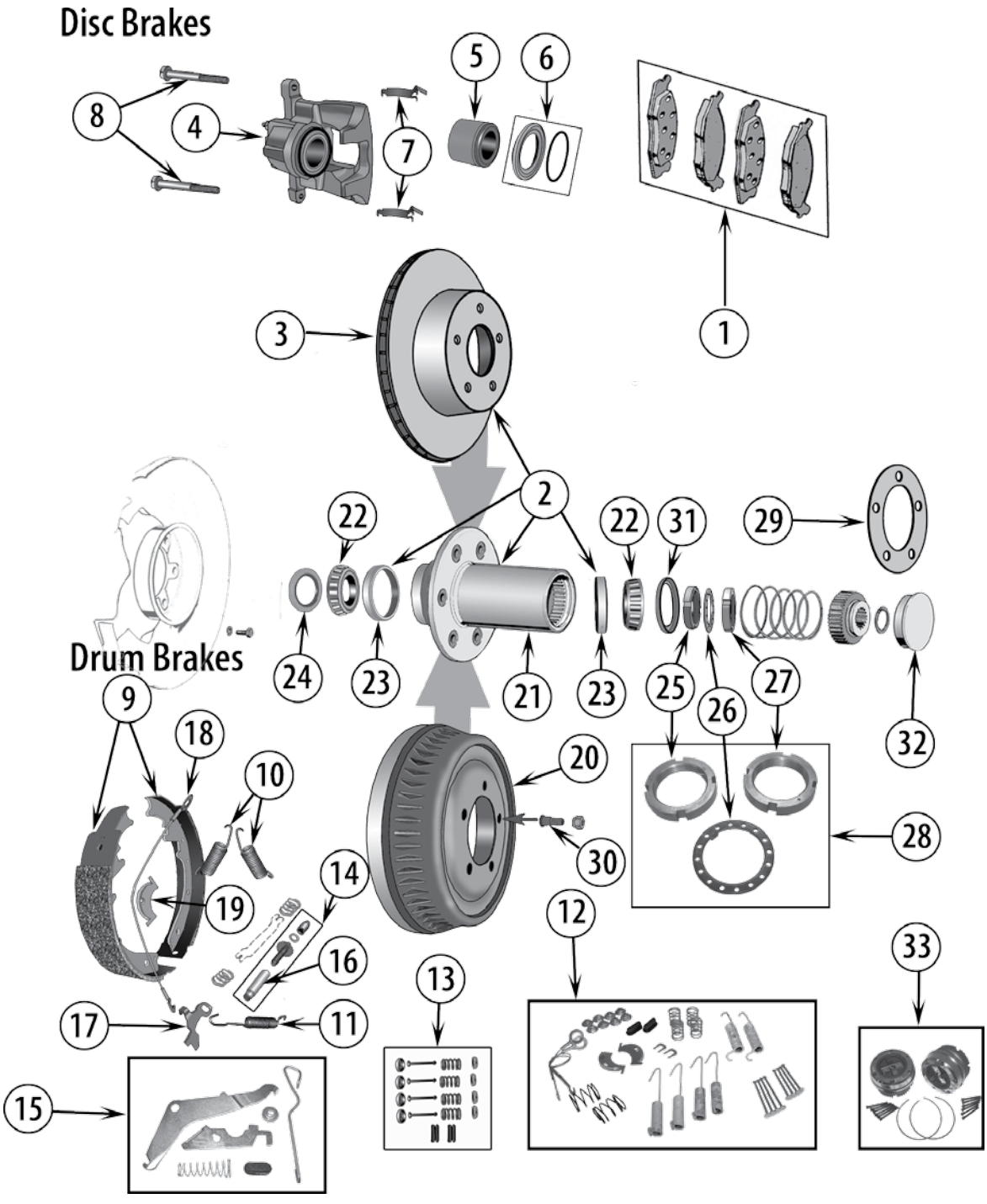

Copyright © 2014 Crown Automotive Sales Co., Inc. All rights reserved.

1963-1991 SJ • 1963-1988 J-Series

Item #	Decription	Application	Size	Location	Comments	Replaces Part #
FRONT DISC BRAKES						
1	Pad Set	1974-91 SJ, J-Series				83504371
2	Hub & Rotor Assembly	1974-91 SJ, J-10 1979-88 J-20			6 on 5.5" Bolt Pattern 8 on 6.5" Bolt Pattern	J5357391* J5359275
3	Rotor Only	1974-91 SJ, J-10 1979-88 J-20			6 on 5.5" Bolt Pattern 8 on 6.5" Bolt Pattern	5357391R 5359275R
4	Caliper Assembly	1974-91 SJ, J-Series 1974-91 SJ, J-Series		Right Left	Less Pads Less Pads	83501980* 83501981*
5	Piston, Caliper	1974-91 SJ, J-Series			Piston Only	J8124571
6	Seal Kit, Caliper	1974-91 SJ, J-Series			Includes 1 Seal and 1 Boot	J8126755
7	Spring, Caliper Support	1974-91 SJ, J-Series				J8124573
8	Bolt, Caliper Housing	1974-91 SJ, J-Series				J8124572
FRONT & REAR DRUM BRAKES						
9	Shoe & Lining Set	1963-73 SJ, J-Series 1974-91 SJ, J-10 1979-88 J-20	11" x 2" Bendix 11" x 2" Delco 12" x 2-1/2"	Front or Rear Rear Rear		J8130067 J8127782 J8130362
10	Spring, Brake Shoe Return	1963-73 SJ, J-Series	11" x 2" Bendix	Front or Rear	Upper; 2 Required Per Wheel	J0937953
11	Spring, Adjusting Screw	1963-73 SJ, J-Series	11" x 2" Bendix	Front or Rear		J0943136
12	Small Parts Kit - Master	1974-91 SJ, J-10 1979-88 J-20	11" x 2" Delco 12" x 2-1/2"	Rear		4636775 4636776
13	Hold Down Kit, Brake Shoe	1963-73 SJ, J-Series 1963-73 J-Series	11" x 2" Bendix 12" x 2"	Front or Rear Rear	1 Required Per Wheel 1 Required Per Axle	J0937952 J0943150
14	Adjuster Kit, Brake Shoe	1963-73 SJ, J-Series 1963-73 SJ, J-Series 1974-91 SJ, J-10 1974-91 SJ, J-10	11" x 2" Bendix 11" x 2" Bendix 11" x 2" Delco 11" x 2" Delco	Front or Rear Left Front or Rear Right Rear Left Rear Right		943131A 943132A J8124513 J8124514
15	Automatic Adjuster Kit, Brake Shoe	1979-88 J-20 1979-88 J-20	12" x 2-1/2" 12" x 2-1/2"	Rear Left Rear Right		J8124524 J8124525
16	Nut, Brake Shoe Adjusting	1963-73 SJ, J-Series	11" x 2" Bendix	Front or Rear Left		J0998350
17	Lever, Automatic Adjust	1963-73 SJ, J-Series 1963-73 SJ, J-Series 1963-73 J-Series 1963-73 J-Series	11" x 2" Bendix 11" x 2" Bendix 12" x 2" 12" x 2"	Front or Rear Left Front or Rear Right Rear Left Rear Right		J0943140 J0943141 J0943148* J0943149
18	Cable, Automatic Adjust	1963-73 SJ, J-Series 1963-73 J-Series	11" x 2" Bendix 12" x 2"	Front or Rear Rear		J0943138 J0943147
19	Guide, Automatic Adjust Cable	1963-73 SJ, J-Series	11" x 2" Bendix	Front or Rear		J3201947
20	Drum	1963-73 SJ, J-Series 1971-73 SJ, J-Series 1974-91 SJ, J-10 1979-88 J-20	11" x 2" Bendix 11" x 2" Bendix 11" x 2" Delco 12" x 2-1/2"	Front Rear Rear Rear	Smooth w/ Dana 44 w/ Flanged Axles	J0999728 J0999728 J5359281 J8124957
HUBS, Etc.						
21	Hub	1963-73 SJ, J-Series 1974-91 SJ, J-10 1979-88 J-20	11" x 2" Bendix All All	Front Left or Right Front Left or Right Front Left or Right	5 on 5.5" Bolt Pattern 6 on 5.5" Bolt Pattern 8 on 6.5" Bolt Pattern	J8136650 5357391H* 5359275H
22	Bearing, Wheel	1963-73 SJ, J-Series 1974-91 SJ, J-Series 1963-91 SJ, J-Series	All All All	Front Inner Front Inner Front Outer		J3156052 J8128841 J3156052
23	Cup, Wheel Bearing	1963-73 SJ, J-Series 1974-91 SJ, J-Series	All All	Front Inner or Outer Inner		J0925447 J5357394
24	Seal, Hub	1963-73 SJ, J-Series 1974-91 SJ, J-Series 1974-76 SJ, J-Series	All All All	Front Front Front	 w/ Front Disc w/ Front Drum	J0938151 J5359703 J5352171
25	Nut, Wheel Bearing	1974-91 SJ, J-Series	All	Front Inner		J4004816
26	Lock Washer, Wheel Bearing	1974-91 SJ, J-Series	All	Front		J4004815
27	Nut, Wheel Bearing	1974-91 SJ, J-Series	All	Front Outer		J5352169
28	Washer & Nut Kit, Spindle	1974-91 SJ, J-Series	All	Front Inner & Outer		4004816K
29	Gasket, Hub Flange	1963-73 SJ, J-Series	All	Front		J0649784
30	Stud, Wheel	1974-91 SJ, J-10 1979-88 J-20	All All	Front Front		J8124803 J8124804
31	Retainer, Wheel Bearing	1974-91 SJ, J-Series	All	Front		J5352650
32	Cap, Wheel Bearing	1974-91 SJ, J-Series	All	Front		J5352268
33	Manual Locking Hub Set	1974-91 SJ, J-Series	All	Front	w/ Dana 44 Front Axle	400518

*Not Currently Available

Continued on next page

Copyright © 2014 Crown Automotive Sales Co., Inc. All rights reserved.

1963-1991 SJ (Continued)
1963-1988 J-Series

1963-1973 SJ, J-Series	11" x 2" Bendix Screw Adjusting	Front or Rear
1963-1973 J-Series	12" x 2" Screw Adjusting	Rear
1974-1991 SJ, J-Series	11" x 2" Delco Screw Adjusting	Rear
1979-1988 J-Series	12" x 2-1/2" Screw Adjusting	Rear
1974-1991 SJ, J-Series	11-7/8" Disc Brake	Front
1979-1988 J-Series	12-1/2" Disc Brake	Front

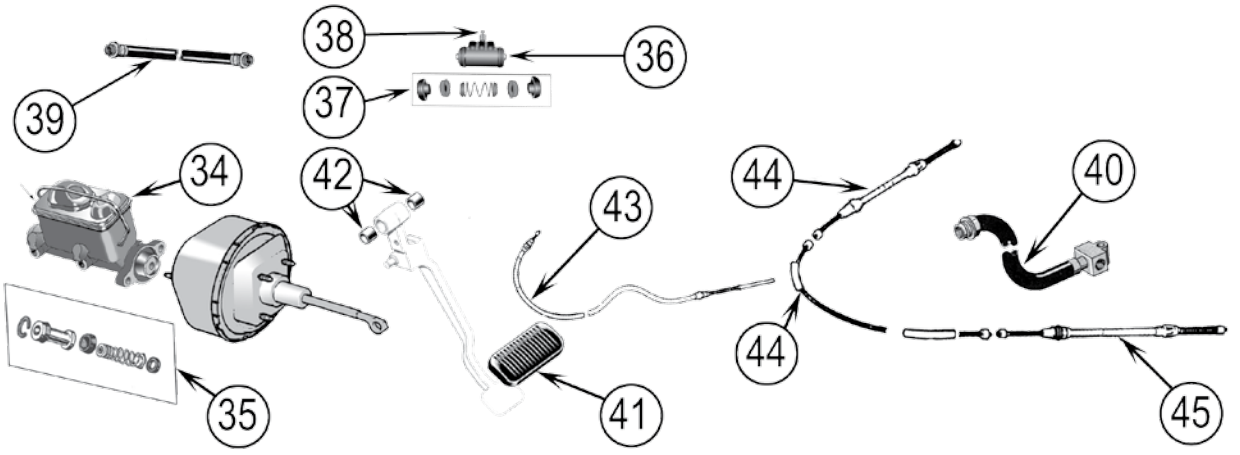

Item #	Decription	Application	Size	Location	Comments	Replaces Part #
HYDRAULICS						
34	Master Cylinder	1965-73 SJ	All		w/ Dual Reservoir Master Cylinder	J8126737
		1967-73 J-Series	All		w/o 13" Rear Brakes	J8126737
		1974-80 SJ, J-Series	All		w/ Power Brakes	J8126739
		1981-91 SJ, J-Series	All			J8133316
35	Repair Kit, Master Cylinder	1965-73 SJ	All		w/ Dual Reservoir Master Cylinder	J8126747
		1967-73 J-Series	All		w/o 13" Rear Brakes	J8126747
		1974-80 SJ, J-Series	All		w/ Power Brakes	J8127771
		1981-91 SJ, J-Series	All			J8133317
36	Wheel Cylinder	1963-73 SJ, J-Series	11" x 2" Bendix	Front Left	1-1/8" Bore	J8126766
		1963-73 SJ, J-Series	11" x 2" Bendix	Front Right	1-1/8" Bore	J8126692
		1963-70 SJ, J-Series	11" x 2" Bendix	Rear Left	1" Bore	J0937959
		1963-70 SJ, J-Series	11" x 2" Bendix	Rear Right	1" Bore	J0937960
		1971-73 SJ, J-Series	11" x 2" Bendix	Rear Left	15/16" Bore	J8124799
		1971-73 SJ, J-Series	11" x 2" Bendix	Rear Right	15/16" Bore	J8126775
		1974-91 SJ, J-10	11" x 2" Delco	Rear Left or Right	USA & Canada	J8129723
		1974-91 SJ, J-10	11" x 2" Delco	Rear Left or Right	Export	J8130747
		1979-88 J-20	12" x 2-1/2"	Rear Left or Right		J8129724

Copyright © 2014 Crown Automotive Sales Co., Inc. All rights reserved.

1963-1991 SJ • 1963-1988 J-Series (Continued)

Item #	Decription	Application	Size	Location	Comments	Replaces Part #
37	Repair Kit, Wheel Cylinder	1963-73 SJ, J-Series 1963-70 SJ, J-Series 1971-73 SJ, J-Series 1974-91 SJ, J-10	11" x 2" Bendix 11" x 2" Bendix 11" x 2" Bendix 11" x 2" Delco	Front Rear Rear Rear	1-1/8" Bore 1" Bore 15/16" Bore	J8126753 8126964 J8125880 J8124566
38	Screw, Bleeder	1974-91 SJ, J-Series 1974-91 SJ, J-Series		Front Rear	3/8"-24 5/16"-24	J8129722 J8127925
39	Brake Hose, Front	1963-64 SJ w/ 4WD 1965-73 SJ w/ 4WD 1965-70 SJ w/ 2WD 1963-73 J-Series 1979-91 SJ, J-10 1979-88 J-Series	All All All All All All		w/ Dual Reservoir Master Cylinder; 19-1/8" w/ Dual Reservoir Master Cylinder; 18" 15-1/2" 19-1/8" w/ 119" Wheelbase w/ 131" Wheelbase	J0991360 J0946550 J0645544 J0991360 J5359322 J5359323
40	Brake Hose, Rear	1963-64 SJ 1963-64 SJ 1963-70 SJ 1963-64 J-Series 1963-67 J-Series 1965-70 J-Series 1965-70 J-Series 1974-76 SJ 1976-91 SJ, J-10 79/88 J-10, J-20	All All All All All All All All All All		16" 19-1/8" 12" w/ 126" Wheelbase; 24" w/ 120" Wheelbase; 19-1/8" w/ 132" Wheelbase; 16" w/o 132" Wheelbase; 24" 119" Wheelbase 131" Wheelbase	J0937884 J0991360 J0800896 J0930640 J0991360 J0937884 J0930640 J5355076 J5355076 J5362871
MISCELLANEOUS						
41	Pad, Brake Pedal	1963-91 SJ, J-Series			w/ Manual Transmission	J5363508
42	Bushing, Pedal	1963-91 SJ, J-Series			Bronze	J0946177
PARKING BRAKE						
43	Cable, Lever to Equalizer	1980-91 SJ, J-10 1982-91 SJ, J-10 1980-88 SJ, J-Series 1980-91 SJ, J-Series 80/88 J-20			w/ 4-Speed Manual; 45-3/4" w/ 5-Speed Manual; 51-3/4" w/ 4.2L w/ Auto Trans; 51-3/4" w/ 5.9L w/ Auto Trans; 45-3/4" w/ 4-Speed Manual; 51-3/4"	J5361026 J5361029 J5361029 J5361026 J5361029
44	Cable, Equalizer to Rear Cable	1980-91 SJ, J-10 1980-88 SJ, J-10 1980-91 SJ, J-Series 1980-88 J-20			w/ 4-Speed Manual; 47" w/ 4.2L w/ Auto Trans; 37" w/ 5.9L w/ Auto Trans; 47" 37"	J5361279 J5361280 J5361279 J5361280
45	Cable, Rear	1973 J-Series 1980-91 SJ 1981-86 J-10		Left or Right Left or Right Left or Right	Except 4700, 4800 61" 119" Wheelbase; 61-1/2"	J5351672 J5362132 J5362131

Copyright © 2014 Crown Automotive Sales Co., Inc. All rights reserved.

Notes

Copyright © 2014 Crown Automotive Sales Co., Inc. All rights reserved.

Heat & Air Conditioning Components
CJ-5, 6, 7, 8
SJ, J-Series

Heater Cores

Applications	Years	Comments	Replaces Part #
CJ-5, 6, 7	1975-77	w/ 2-Speed Motor, Located In Passenger Compartment	J8125123
CJ-5, 7, 8	1978-86	Blower Motor Extends Into Electrical Compartment	J5469877
SJ, J-Series	1978-91		J8128784

Motors, Heater & Defroster Blower

Applications	Years	Comments	Replaces Part #
Commando	All	w/o A/C	J8127021
CJ-5, 6, 7	1976-77	Located In Passenger Compartment	J8127021
CJ-5, 6, 7	1977-86	Located In Engine Compartment	56001449
SJ, J-Series	1978-81		J8128778
SJ, J-Series	1981-85		J5752943
SJ	1986-01		56002007

Belts, Air Conditioning Drive

Applications	Engine	Years	Comments	Replaces Part #
All	6-232, 258	1975-80	w/o American Air	JY017561
All	6-232, 258	1975-81	w/ American Air	JY013541
All	6-232, 258	1981	Except CA, w/o American Air	JY017561
SJ, J-Series	V8-304, 360, 401	1976	w/o American Air	J3227691
All	V8-304, 360, 401	1977-81	w/o American Air	J3227692

Heater & Fresh Air Cables

Applications	Years	Comments	Replaces Part #
CJ-5, 7, 8	1976-86	Temperature Control	J5463656
CJ-5, 7, 8	1976-86	Fresh Air	J5463657
CJ-5, 7, 8	1976-86	Heater & Defrost	J5463655
CJ-5, 7, 8	1976-86	Cable Kit, Temperature Control, Fresh Air, Heater & Defrost	5463655K

Copyright © 2014 Crown Automotive Sales Co., Inc. All rights reserved.

Heat & Air Conditioning Components
(Continued)

Switch, Blower Motor

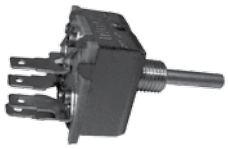

Applications	Years	Comments	Replaces Part #
CJ-5, 7, 8	1977-86		J5462784

Ducts & Hoses

Applications	Years	Comments	Replaces Part #
CJ-5, 7, 8	1977-86	Defroster Hose	J5462328
CJ-5, 6, 7, 8	1974-86	Floor Duct	55035618

Dash Lamps

Applications	Years	Comments	Replaces Part #
CJ-5, 7, 8	1976-86	"TEMP"	J5752816
CJ-5, 7, 8	1976-86	"AIR"	J5752815
CJ-5, 7, 8	1976-86	"DEF"	J5752817
CJ-5, 7, 8	1976-86	"FAN"	J5752818
CJ-5, 7, 8	1976-86	Kit including Lights, Wiper/Washer, Air, Temp, Defrost & Fan	5752813K

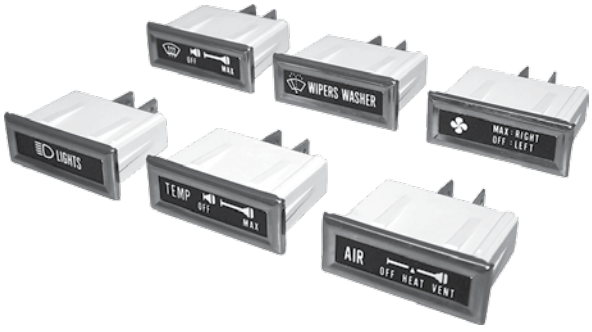

Copyright © 2014 Crown Automotive Sales Co., Inc. All rights reserved.

EXHAUST

4-134 Models, F-Head & L-Head Engines
CJ-2A, 3A, 3B, 5, 6, FC-150, C101 Commando,
Willy's Jeepster, Pickup Sedan Delivery
& Station Wagon. 10-2

V6-225 Engine
1966-1971 CJ-5, CJ-6. 10-3

3.8L (6-232), 4.2L (6-258) Engines
1966-1986 CJ-5, CJ-6, CJ-7, CJ-8, C104 Commando 10-3

GM 2.5L (4-151)
1980-1983 CJ-5, CJ-7
AMC 2.5L (4-150)
1983-1986 CJ-5, CJ-7, CJ-8 10-4

5.0L (V8-304) Engine
1971-81 CJ-5, CJ-6, CJ-7, CJ-8, C104 Commando
5.9L (V8-360), 6.6L (V8-401) Engines
1970-91 SJ, J-Series. 10-4

Copyright © 2014 Crown Automotive Sales Co., Inc. All rights reserved.

4-134 Models, F-Head & L-Head Engines

CJ-2A, 3A, 3B, 5, 6, FC-150, C101 Commando, Willy's Jeepster, Pickup Sedan Delivery & Station Wagon

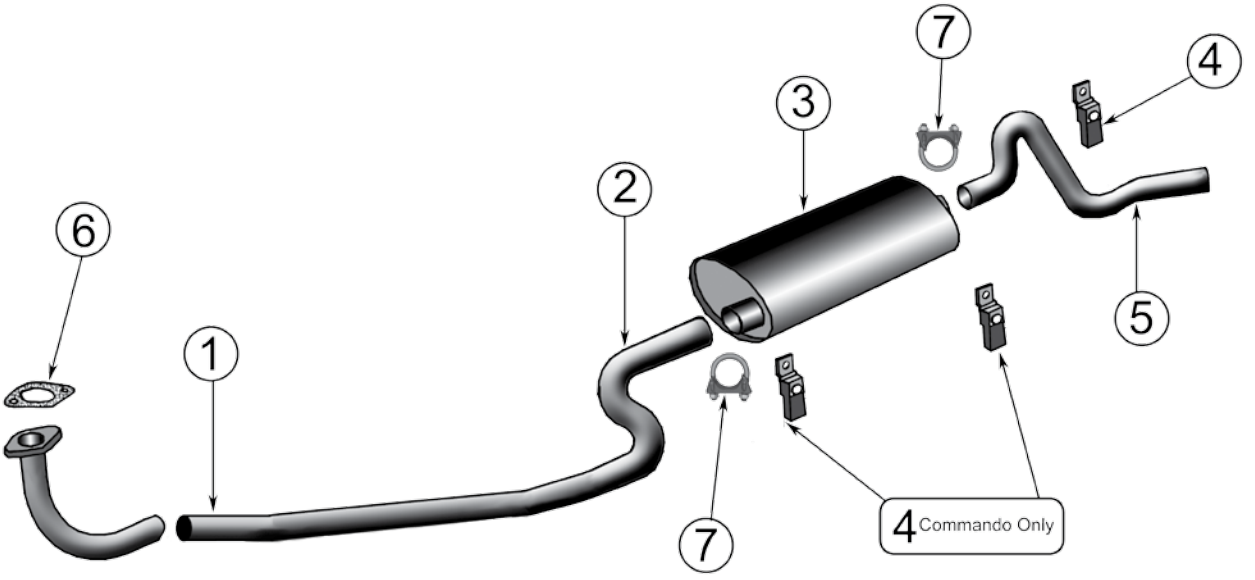

8 Complete Kit
Replaces Part # 641878K

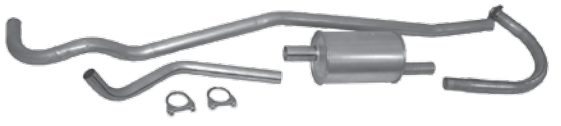

Item #	Description	Application	Transmission	Comments	Replaces Part #
1	Front Pipe	CJ-2A, 3A, 3B, 5, 6 FC-150	All All		J0641856 J0641856
2	Intermediate Pipe	CJ-2A, 3A, 3B, 5 FC-150	T90 T90		J0916319 J0916319
3	Muffler	CJ-2A, 3A, 3B CJ-5, 6 FC-150	All All All	w/ Front Mounted Fuel Tank	641878 641878 641878
4	Insulator, Tailpipe	CJ-2A, 3A, 3B, 5, 6 C101 Commando	All All		J0944748 J0944748
5	Tailpipe	CJ-2A, 3A, 3B CJ-5, 6 FC-150	All All All	w/ Front Mounted Fuel Tank	J0641872 J0641872 J0641872
6	Gasket, Front Pipe	All	All	Exhaust Manifold to Front Pipe	J0634814
7	Clamp	All All	All All	1-1/2" U-Bolt Style 1-3/4" U-Bolt Style	630534 642469
8	Exhaust Kit	CJ-2A, 3A, 3B, 5 CJ-5 w/ Front Mounted Fuel Tank	All All	Includes 1, 2, 3, 4, 5, 6, 7 Includes 1, 2, 3, 4, 5, 6, 7	641878K 641878K

Copyright © 2014 Crown Automotive Sales Co., Inc. All rights reserved.

V6-225 Engine

1966-1971 CJ-5, CJ-6

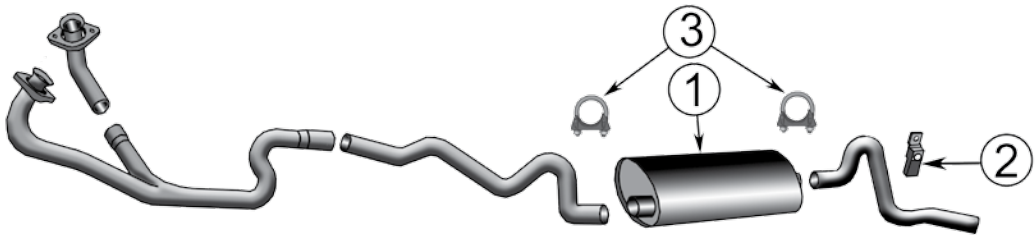

Item #	Description	Model	Comments	Replaces Part #
1	Muffler	CJ-5, 6	w/ Front Mounted Fuel Tank	641878
2	Insulator, Tailpipe	CJ-5, 6	w/ Rear Mounted Fuel Tank	J0944748
3	Clamp	CJ-5, 6	1-1/2" U-Bolt Style 1-3/4" U-Bolt Style	630534 642469

3.8L (6-232), 4.2L (6-258) Engines

1966-1986 CJ-5, CJ-6, CJ-7, CJ-8, C104 Commando

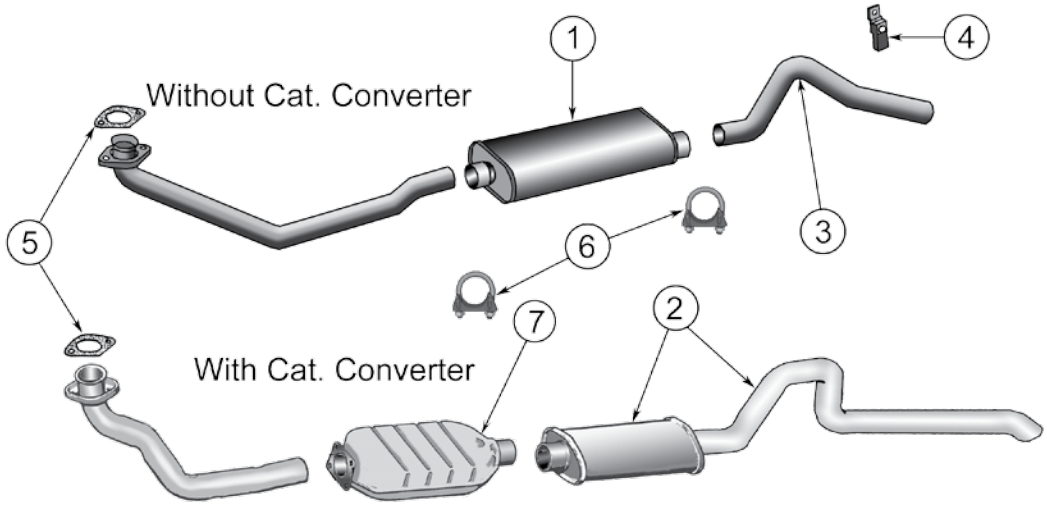

Item #	Description	Year	Model	Comments	Replaces Part #
1	Muffler	1972-78	CJ-5, 6, 7		J5351986
2	Muffler & Tailpipe	1981-86	CJ-5, 7		J5362725
3	Tailpipe	1972-75 1976-79	CJ-5, 6 CJ-5, 6, 7	 Except CA	5351985* 8136644*
4	Insulator, Tailpipe (Rear)	1972-75 1972-73	CJ-5, 6 C104		J0944748 J0944748
5	Gasket, Front Pipe to Manifold	1974-75 1976-79	CJ-5, 6 CJ-5, 7		83300053 J3223546
6	Clamp	All	All	2"	J8126663
7	Catalytic Converter	1975-78	CJ-5, 6, 7	4.2L w/o CA Em.	J5358641

* Not Currently Available

Copyright © 2014 Crown Automotive Sales Co., Inc. All rights reserved.

GM 2.5L (4-151)

1980-1983 CJ-5, CJ-7

AMC 2.5L (4-150)

1983-1986 CJ-5, CJ-7, CJ-8

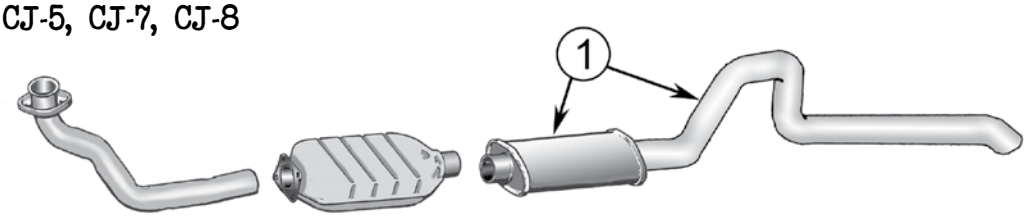

Item #	Description	Application	Engine	Replaces Part #
1	Muffler & Tailpipe	CJ-5, 7 CJ-5, 7	GM 2.5L (4-151) AMC 2.5L (4-150)	J5362725 J5362725

5.0L (V8-304) Engine

1971-81 CJ-5, CJ-6, CJ-7, CJ-8, C104 Commando

5.9L (V8-360), 6.6L (V8-401) Engines

1970-91 SJ, J-Series

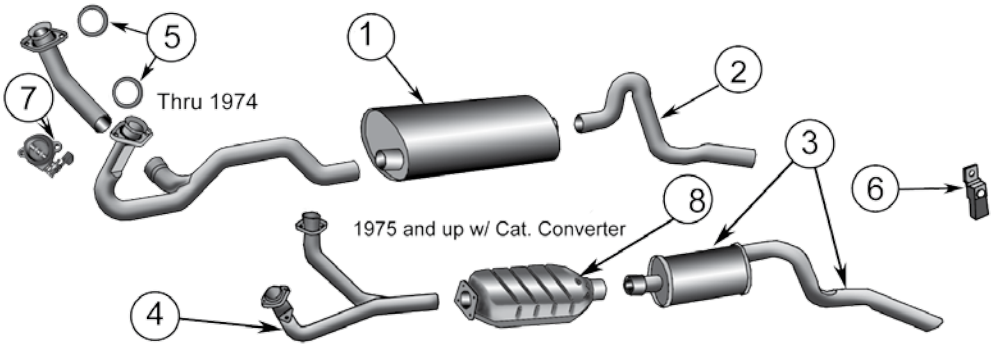

Item #	Description	Year	Model	Engine	Comments	Replaces Part #
1	Muffler	1972-74	CJ-5, 6	5.0L (V8-304)		J5351986
2	Tailpipe	1972-73 1976-78	CJ-5 J-Series	5.0L (V8-304) 5.9L (V8-360), 6.6L (V8-401)	w/ 2" Diameter Muffler	5351985* J8136657
3	Muffler & Tailpipe	1979-81	CJ-5, 7	5.0L (V8-304)		J5362725
4	Pipe, Exhaust	1975	CJ-5	5.0L (V8-304)	w/ Converter	5354586*
5	Seal, Manifold to Front Pipe	1975-81	CJ-5, 6, 7, 8	5.0L (V8-304)	2 Required Driver/Passenger	J3223547
6	Insulator, Tailpipe	1972-75 1972-73	CJ-5, 6 C104	5.0L 5.0L		J0944748 J0944748
7	Damper, Exhaust to Manifold	1975-91	CJ5-6 SJ, J-Series	5.0L (V8-304) 5.9L (V8-360), 6.6L (V8-401)	Includes Seal	J3235998
8	Catalytic Converter	1975-78	CJ-5, 6, 7	5.0L	w/o CA Emissions	J5358641

* Not Currently Available

Copyright © 2014 Crown Automotive Sales Co., Inc. All rights reserved.

STEERING LINKAGE

Rear Mounted Steering Gear
1941-1971 CJ-2A, CJ-3A, CJ-3B, CJ-5, CJ-6,
MB, M38, M38-A1 FC-150, FC-170 11-2

Front Mounted Steering Gear
1972-1986 CJ-5, CJ-6, CJ-7, CJ-8
1972-1973 C104 Commando. 11-4

Front Mounted Steering Gear
1965-1991 SJ, J-Series 11-8

Rear Mounted Steering Gear
1966-1971 C101 Commando. 11-12

Rear Mounted Steering Gear
1946-1965 Willys Station Wagons,
Sedan Delivery Wagons & Pickup Trucks. 11-13

Steering Belts & Hoses 11-14

RT OFF-ROAD Indicates a RT Off-Road Upgrade Item

Copyright © 2014 Crown Automotive Sales Co., Inc. All rights reserved.

Steering Linkage
Rear Mounted Steering Gear

CJ-2A, CJ-3A, CJ-3B, CJ-5, CJ-6, MB, M38, M38-A1, FC-150, FC-170

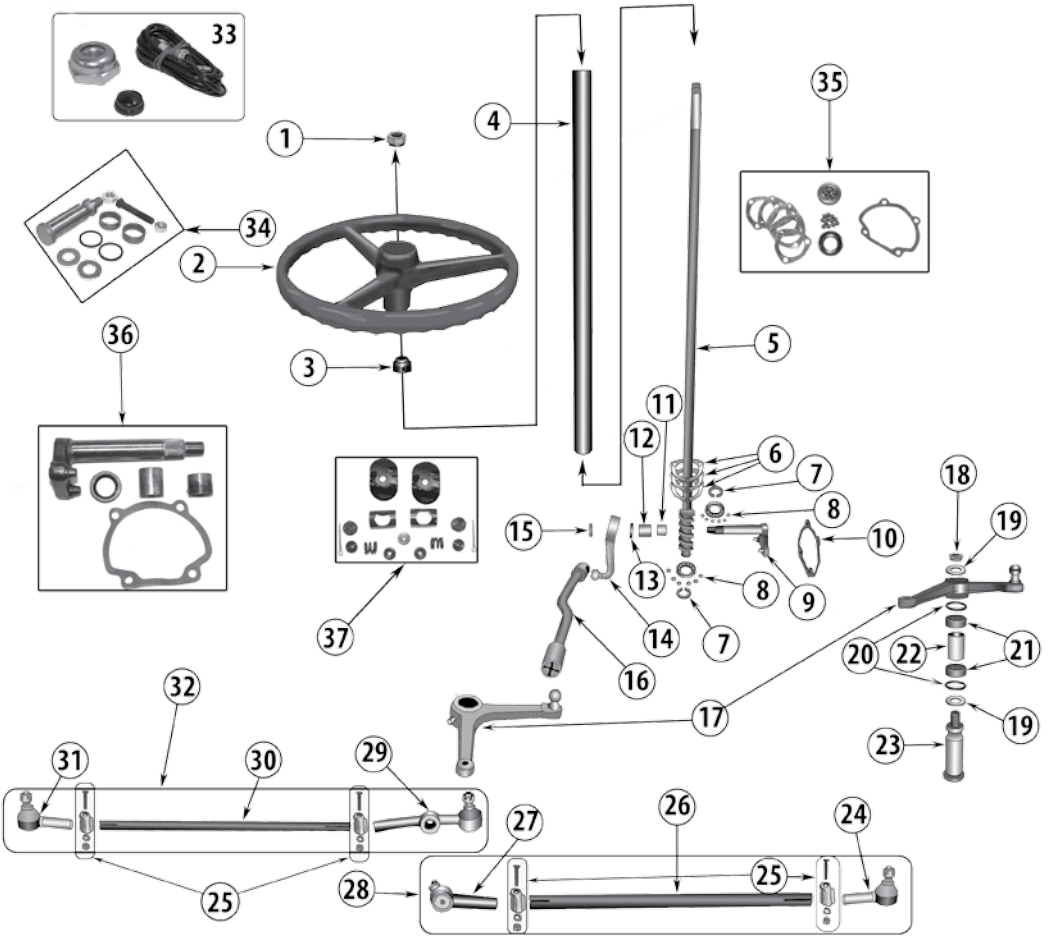

Item #	Description	Application	Comments	Replaces Part #
1	Nut, Worm Shaft	MB, CJ-2A CJ-3A, 3B, 5, 6	 w/ 1-1/4" Horn Button	A633 801425
2	Steering Wheel	MB, CJ-2A, 3A, 3B, 5, 6 CJ-3B, 5, 6, FC-150	w/ 1-1/4" Horn Button w/ 2-3/8" Horn Button	914047 927417
3	Bearing, Steering Column	All		J0801422
4	Steering Column	All		J0914054 *
5	Worm Shaft	MB CJ-2A Before Serial # 178361 CJ-2A After Serial # 178361 CJ-3A, 3B CJ-5, 6 w/ Gear Stamped #5-13230 CJ-5, 6 w/ Gear Stamped #TL-13231, TL-13234, TL-13019 M38-A1	40-1/2" 40-1/2" 41-1/2" 41-1/2" 41-1/2" 42-3/8" 42-3/8"	A8838 A8838 647693 647693 647693 807480 807480
6	Shim Set, Steering Worm Shaft	All		A6760
7	Retainer, Worm Shaft Bearing	MB, CJ-2A, 3A, 3B, Pickup, Delivery Sedan, Station Wagon CJ-5, 6 w/o Gear Stamped TL-13018		J0808591 J0808591
8	Bearing, Worm Shaft	All	22 Required	J0639104
9	Sector Shaft	CJ-2A, 3A, 3B, MB CJ-5, 6 w/ Gear Stamped #5-13230 M38		A745 A745 J0804533

* Not Currently Available

Copyright © 2014 Crown Automotive Sales Co., Inc. All rights reserved.

Steering Linkage
Rear Mounted Steering Gear

Item #	Description	Application	Comments	Replaces Part #
10	Gasket, Side Cover	CJ-2A, 3A, 3B, MB, M38 CJ-5, 6 w/ Gear Stamped #5-13230 CJ-5, 6 w/o Gear Stamped #5-13230		639119 639119 J0807476
11	Bushing, Sector Shaft	CJ-2A, 3A, 3B, MB CJ-5, 6 w/ Gear Stamped #5-13230	Inner Inner	J0639090 J0639090
12	Bushing, Sector Shaft	CJ-2A, 3A, 3B, MB CJ-5, 6 w/ Gear Stamped #5-13230	Outer Outer	J0639091 J0639091
13	Oil Seal, Sector Shaft	CJ-2A, 3A, 3B, MB CJ-5, 6 w/ Gear Stamped #5-13230		J0927645 J0927645
14	Pitman Arm	All w/ F4 except Tuxedo Park & MB		JA001116
15	Nut, Sector Shaft	All w/ F4 except Tuxedo Park, M38, M38A-1		639115
16	Drag Link Assembly	CJ-2A, 3A After Serial #199079 CJ-5, 6 w/ 4-134 F-Head CJ-3B, M38, M38-A1		J0646619 J0646619 J0646619
17	Bellcrank	All w/ 1-1/8" Bellcrank		J0946965
18	Nut, Bellcrank	All w/ 3/4" Bellcrank All w/ 7/8" Bellcrank		J8130364 J0649240
19	Washer, Bellcrank	All w/ 3/4" Bellcrank All w/ 7/8" Bellcrank		J0946969 J0131018
20	Seal, Bellcrank	All w/ 3/4" Bellcrank All w/ 1-1/8" Bellcrank		JA000858 J0645663
21	Bearing, Bellcrank	All w/ 3/4" Bellcrank All w/ 7/8" or 1-1/8" Bellcrank		JA000857 J0928099
22	Spacer, Bellcrank	All w/ 7/8" Bellcrank		J0645662
23	Shaft, Bellcrank	All w/ 3/4" Bellcrank All w/ 7/8" Bellcrank All w/ 1-1/8" Bellcrank	4" Long	JA008445 J0914223 J0946968
24	Tie Rod End, Left Tie Rod	All M38, M38-A1	Outer; 11/16" Threads Outer; 3/4" Threads	J8136674 J0809190
25	Clamp Kit, Tie Rod	All		JA000837
26	Tube, Tie Rod Adjusting	FC-150, M38-A1	Right; 18-7/8" Long; 11/16" Threads	J0642059
27	Tie Rod End, Left Tie Rod	All	Inner; 11/16" Threads	J8136600
28	Tie Rod Assembly	CJ-2A, 3A After Serial # 22972 CJ-3B, 5, 6, FC-150, M38, M38-A1	Left; 19-3/4" Long; 11/16" Threads Left; 19-3/4" Long; 11/16" Threads	J0642056 J0642056
29	Tie Rod End, Right Tie Rod	All Except MB MB, FC-150 M38, M38-A1	Inner; 11/16" Threads Inner; 11/16" Threads Inner; 3/4" Threads	J0640178 J8136600 J0809189
30	Tube, Tie Rod Adjusting	CJ-2A, 3A After Serial # 22972 CJ-3B, 5, 6, FC-150, M38, M38-A1	Left; 17-3/4" Long; 11/16" Threads Left; 17-3/4" Long; 11/16" Threads	J0642058 J0642058
31	Tie Rod End, Right Tie Rod	All Except MB MB M38, M38-A1	Outer; 11/16" Threads Outer; 11/16" Threads Outer; 3/4" Threads	J8136600 J8136674 J0809191
32	Tie Rod Assembly	CJ-2A, 3A After Serial # 22972 CJ-3B, 5, 6, FC-150, M38, M38-A1	Right; 24-1/2" Long; 11/16" Threads Right; 24-1/2" Long; 11/16" Threads	J0642057 J0642057
33	Horn Button Kit	MB, CJ-2A w/ 1-1/4" Horn Button CJ-3A, 3B, 5, 6 w/ 1-1/4" Horn Button CJ-3B, 5, 6 FC-150 w/ 2-3/8" Horn Button	Includes Button, Wire, & Nut Includes Button, Wire, Cup, & Nut	A6742K 802359K 927416K
34	Shaft Kit, Bellcrank	All w/ 7/8" Bellcrank All w/ 1-1/8" Bellcrank CJ-2A, 3A Before Serial # 199079 MB	 3/4" 3/4"	J0920556 J0991381 J0915762 J0915762
35	Bearing Kit, Worm Shaft	CJ-2A, 3A, 3B, MB CJ-5, 6, w/o Gear Stamped #TL-13019 FC-150, FC-170, Pickup, Sedan Delivery, Station Wagon		J0646084 J0646084 J0942062
36	Repair Kit, Sector Shaft	CJ-2A, 3A, 3B, MB CJ-5, 6 w/ 4-134 F-Head CJ-5, 6 w/o Gear Stamped #5-13230 M38, M38-A1	7/8" 7/8"	J0805123 J0805123 J0938194 J0938194
37	Repair Kit, Drag Link	CJ-2A, 3A, 3B, 5, 6		J0923418

Copyright © 2014 Crown Automotive Sales Co., Inc. All rights reserved.

Steering Linkage, Front Mounted Steering Gear

1972-1986 CJ-5, CJ-6, CJ-7, CJ-8

1972-1973 C104 Commando,

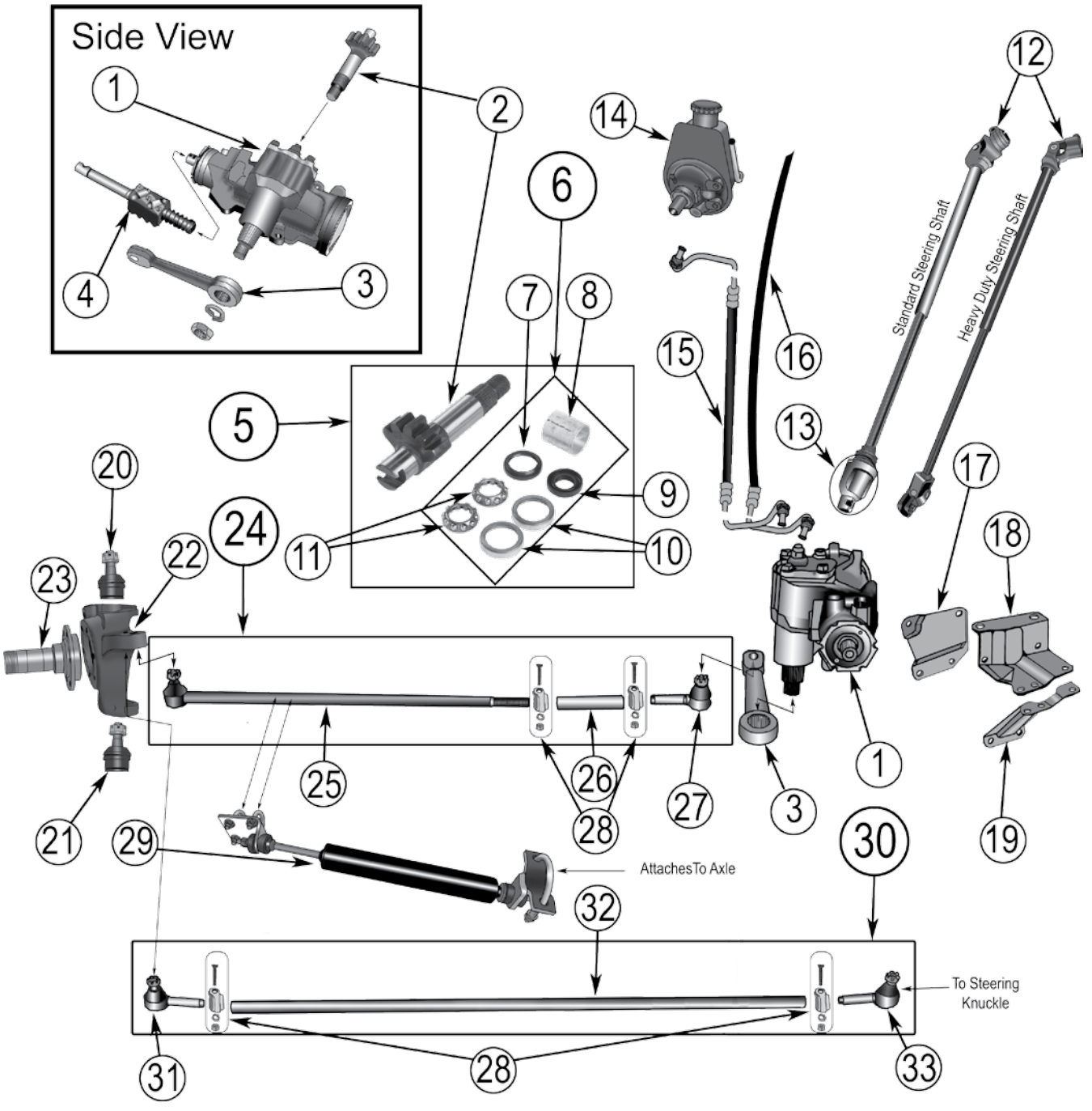

Copyright © 2014 Crown Automotive Sales Co., Inc. All rights reserved.

Steering Linkage, Front Mounted Steering Gear

Item #	Description	Years	Application	Comments	Replaces Part #
1	Steering Gear Assembly	1972-86 1972-79 1980-86	CJ-5, 6, 7, 8, C104 CJ-5, 6, 7 CJ-5, 7, 8	w/ Manual Steering w/ Power Steering; Remanufactured w/ Power Steering; Remanufactured	J0994509 994508R 5363231R
2	Sector Shaft	1972-86	CJ-5, 6, 7, 8, C104	w/ Manual Steering	J8120221
3	Pitman Arm	1972-75 1972-75 1976-86 1976-86	CJ-5, 6, C104 CJ-5, 6, C104 CJ-5, 6, 7, 8 CJ-5, 6, 7, 8	w/ Manual Steering w/ Power Steering w/ Manual Steering w/ Power Steering	J0999415 J0999416 J5356106 J5356104
4	Worm Shaft Assembly	1972-86 1973	CJ-5, 6, 7, 8 C104	w/ Manual Steering w/ Manual Steering	J0998504 J0998504
5	Steering Gear Bearing and Seal Kit	1972-86	CJ-5, 6, 7, 8, C104	w/ Manual Steering	5710618
6	Steering Gear Master Repair Kit	1972-86	CJ-5, 6, 7, 8, C104	w/ Manual Steering	8120221K
7	Seal, Sector Shaft	1972-86	CJ-5, 6, 7, 8, C104	w/ Manual Steering	J4486140
8	Bushing, Sector Shaft	1972-86	CJ-5, 6, 7, 8, C104	w/ Manual Steering	J3200496
9	Seal, Worm Shaft	1972-86	CJ-5, 6, 7, 8, C104	w/ Manual Steering	J4486141
10	Bearing Cup, Worm Shaft	1972-86	CJ-5, 6, 7, 8, C104	w/ Manual Steering; 2 Required	J3200492
11	Bearing, Worm Shaft	1972-86	CJ-5, 6, 7, 8, C104	w/ Manual Steering; 2 Required	J3200491
12	Steering Shaft Assembly	1972-86 1972-86 1972-86 1972-86	CJ-5, 7, 8 CJ-5, 7, 8 CJ-5, 7, 8 CJ-5, 7, 8	w/ Manual Steering w/ Manual Steering; Heavy Duty w/ Power Steering w/ Power Steering; Heavy Duty	J5353135 5353135HD J5354934 5354934HD
13	Coupling, Steering Shaft	1972-86 1972-86	CJ-5, 6, 7, 8 CJ-5, 6, 7, 8	w/ Manual Steering w/ Power Steering	J8121299 J0998710
14	Pump, Power Steering	1983-86 1977-86	CJ-5, 7, 8 CJ-5, 7, 8	w/ AMC 2.5 Engine, w/ Attached Reservoir w/ 4.2, 5.0 & GM 2.5 Engines w/ Attached Reservoir	33001907 52037568
15	Hose, Power Steering Pressure	1975 1976-79 1980-81 1982-86 1972-75 1976-79 1980-81	CJ-5, 6 CJ-5, 6, 7 CJ-5, 7 CJ-5, 7, 8 CJ-5, 6 CJ-5, 6, 7 CJ-5, 7, 8	w/ 3.8L(6-232), 4.2L (6-258) w/ 3.8L(6-232), 4.2L (6-258) w/ 3.8L(6-232), 4.2L (6-258) w/ 4.2L (6-258) w/ 5.0L (V8-304) w/ Left Hand Drive w/ 5.0L (V8-304) w/ 5.0L (V8-304)	J5354381 J5357191 J5370018 J5363661 J5354381 J5357191 J5370016
16	Hose, Power Steering Return	1980-83 1973-74 1977-79 1980 1981-86 1976-79 1980-81 1973-74	CJ-5, 7, 8 CJ-5, 6 CJ-5, 7 CJ-5, 7 CJ-5, 7, 8 CJ-5, 6, 7 CJ-5, 7, 8 C104 Commando	w/ GM 2.5L (4-151) w/ 3.8L(6-232), 4.2L (6-258) w/ 3.8L(6-232), 4.2L (6-258) w/ 4.2L (6-258) w/ 4.2L (6-258) w/ 5.0L (V8-304) w/ 5.0L (V8-304) w/ 4.2L (6-258)	J5370019 J5357190 J5357190 J5370019 J5363662 J5357190 J5370019 J5357190

Indicates a RT Off-Road Upgrade Item

Continued On Next Page

Copyright © 2014 Crown Automotive Sales Co., Inc. All rights reserved.

Steering Linkage, (Continued)
Front Mounted Steering Gear

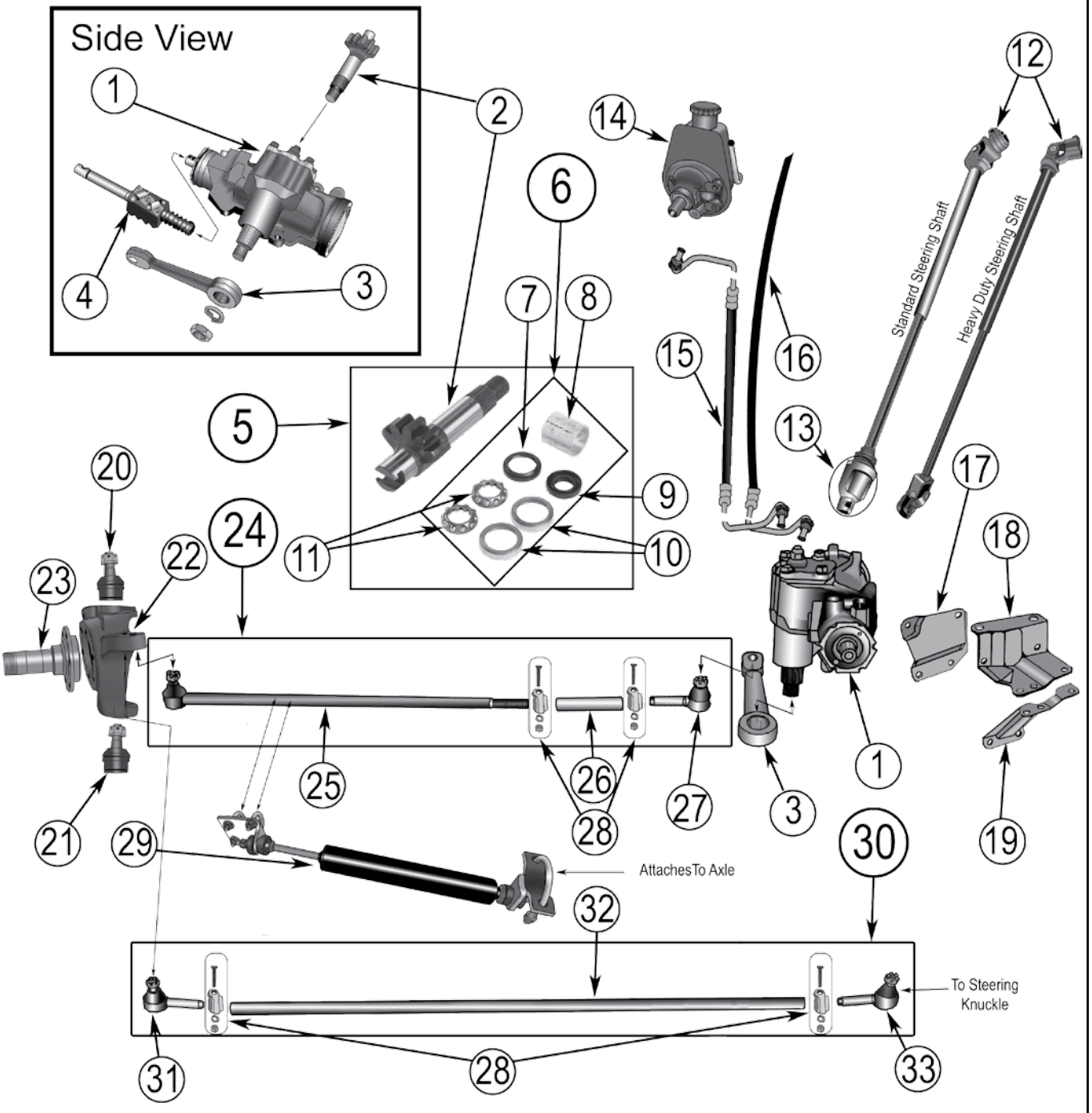

* Not Currently Available

Copyright © 2014 Crown Automotive Sales Co., Inc. All rights reserved.

Steering Linkage, Front Mounted Steering Gear (Continued)

Item #	Description	Years	Application	Comments	Replaces Part #
17	Tie Plate, Steering Gear	1976-86	CJ-5, 7, 8	LHD, w/ Manual or Power Steering	J5355962
18	Bracket, Steering Gear	1976-86	CJ-5, 7, 8	Upper, LHD, w/ Manual or Power Steering	J5355446
19	Bracket, Steering Gear	1976-86	CJ-5, 7, 9	Lower, LHD, w/ Manual or Power Steering	J8127536
20	Ball Joint, Upper	1972-86	CJ-5, 6, 7, 8, C104	w/ Dana 30 Front Axle	J8122495
21	Ball Joint, Lower	1972-86	CJ-5, 6, 7, 8, C104	w/ Dana 30 Front Axle	J8122496
22	Steering Knuckle	1978 1979-86 1979-86	CJ-5, 7 CJ-5, 7, 5 CJ	Left Side, w/ 2 bolt Caliper Plate (Less Ball Joints) Left Side (Less Ball Joints) Right Side	J8133604 J8133604 J8129654 *
23	Spindle, Steering	1972-76 1977-86	CJ-5, 7, 8, C104 CJ-5, 7, 8	Left or Right, w/ Dana 30 Front Axle Left or Right, Includes Bearing & Seals	J8121403 J8128147
24	Drag Link Assembly	1972-83 1976-81 1982-86	CJ-5, 6, C104 CJ-7, 8 CJ-7, 8	w/ Left Hand Drive; 28-1/8" Collapsed Length w/ Left Hand Drive; 28-1/8" Collapsed Length w/ Left Hand Drive; 30-1/2" Collapsed Length	J5356105 J5356105 8134350K
25	Right Tie Rod End, Drag Link	1972-83 1976-81 1982-86	CJ-5, 6, C104 CJ-7, 8 CJ-7, 8	w/ Left Hand Drive; At Steering Knuckle; 24" Long w/ Left Hand Drive; At Steering Knuckle; 24" Long w/ Left Hand Drive; At Steering Knuckle; 24-5/8" Long	J0991744 J0991744 J8134350
26	Adjuster, Drag Link	1972-86	CJ-5, 6, 7, 8, C104	4-1/2" Long; 1/2"-20 Threads, Includes Clamps	J3200671
27	Left Tie Rod End, Drag Link	1972-86	CJ-5, 6, 7, 8, C104	w/ Left Hand Drive; At Pitman Arm; 3-1/8" Long	J8136600
28	Tie Rod Clamp	1972-86	CJ-5, 6, 7, 8, C104	Includes Hardware	JA000837
29	Stabilizer Kit, Steering	1972-86	CJ-5, 6, 7, 8	Includes Hardware	J84500
30	Tie Rod Assembly	1972-83 1976-81 1982-86	CJ-5, 6, C104 CJ-7, 8 CJ-7, 8	w/ Left Hand Drive w/ Left Hand Drive w/ Left Hand Drive	J5350586 J5350586 J8134295
31	Right Tie Rod End, Tie Rod	1972-86 1972-86	CJ-5, 6, 7, 8, C104 CJ-5, 6, 7, 8	w/ Left Hand Drive; 3-1/8" Long w/ Right Hand Drive; 4" Long	J8136674 J8136600
32	Adjuster, Tie Rod	1972-83 1976-81 1982-86	CJ-5, 6, 104 CJ-7, 8 CJ-7, 8	w/ Left Hand Drive; 40-1/8" Long w/ Left Hand Drive; 40-1/8" Long w/ Left Hand Drive; 43-7/8" Long	J5350589 J5350589 J8134290
33	Left Tie Rod End, Tie Rod	1972-86 1972-86	CJ-5, 6, 7, 8, C104 CJ-5, 6, 7, 8	w/ Left Hand Drive; 4" Long w/ Right Hand Drive	J8136600 J0918257
34	Ball Joint Kit	1972-86	CJ-5, 6, 7, 8, C104	Upper & Lower, w/ Dana 30 Front Axle, Incl. Hardware	J8126509
35	Bearing & Seal Kit, Spindle	1977-86	CJ-5, 7, 8	Left or Right, Includes Bearing & Seals	J8127356
36	Steering Column Bearing Kit	1976-86	CJ-5, 7, 8	Includes 2 Bearings, 1 Clip, and 1 Retainer	4487696K
37	Boot Kit, Steering Shaft	1972-86	CJ-5, 7, 8	Includes 1 Boot, 2 Clips & 2 Bearings	8132676K
38	Steering Shaft Coupling Kit	1972-86 1972-86	CJ-5, 6, 7, 8 CJ-5, 6, 7, 8	w/ Power Steering w/ Manual Steering	998710K 8121299K

* Not Currently Available

Copyright © 2014 Crown Automotive Sales Co., Inc. All rights reserved.

Steering Linkage, Front Mounted Steering Gear

1965-1991 SJ, J-Series

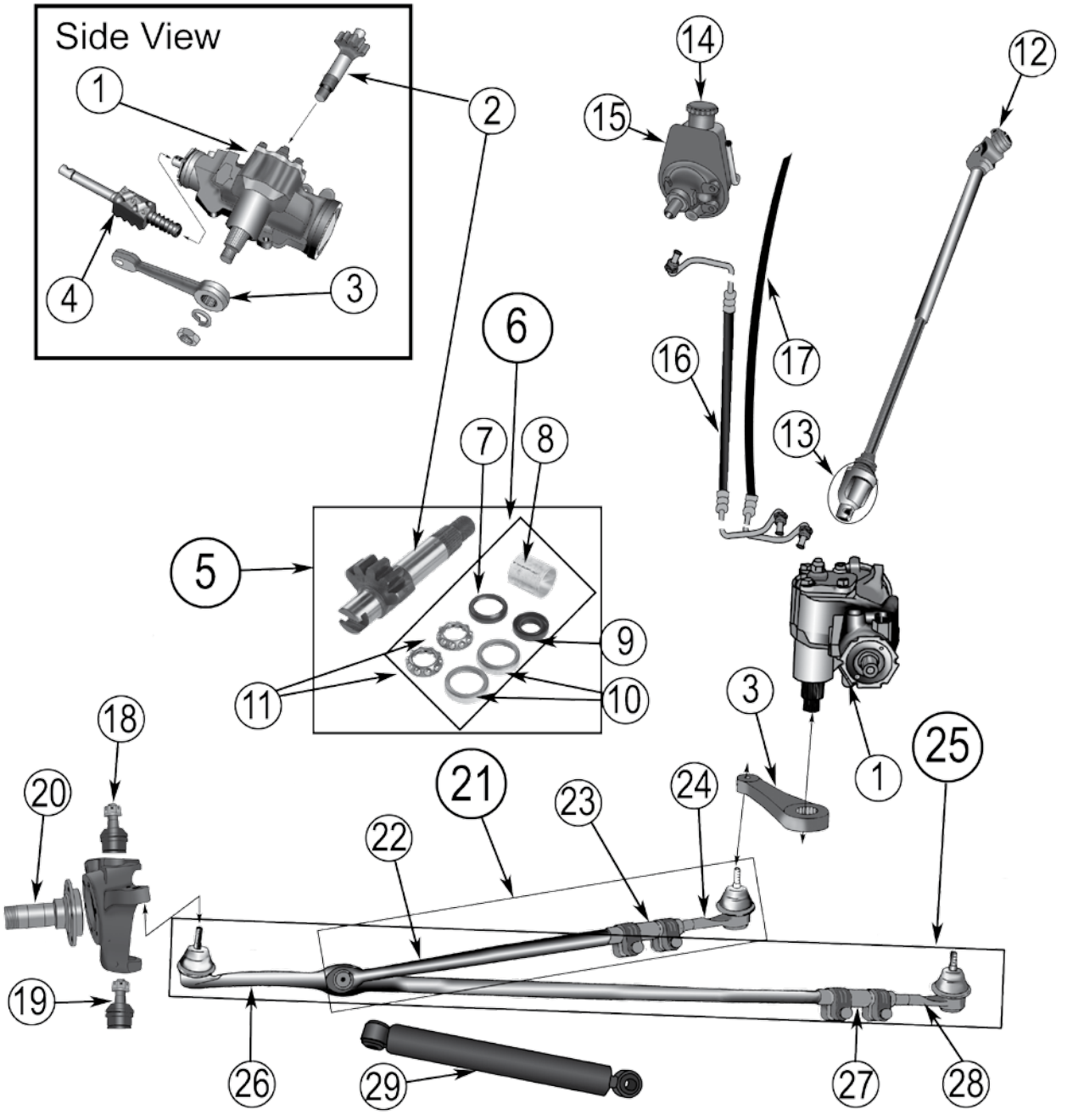

Copyright © 2014 Crown Automotive Sales Co., Inc. All rights reserved.

Steering Linkage, Front Mounted Steering Gear

Item #	Description	Years	Application	Comments	Replaces Part #
1	Steering Gear Assembly	1965-86 1980-91	SJ, J-Series SJ, J-Series	w/ Manual Steering w/ Power Steering; Remanufactured	J0994509 52002085R
2	Sector Shaft	1965-86	SJ, J-Series	w/ Manual Steering	J8120221
3	Pitman Arm	1974-91	SJ, J-Series	w/ Power Steering	J5352278
4	Worm Shaft Assembly	1973-86	SJ, J-Series	w/ Manual Steering	J0998504
5	Steering Gear Bearing and Seal Kit	1965-86	SJ, J-Series	w/ Manual Steering	5710618
6	Steering Gear Master Repair Kit	1965-86	SJ, J-Series	w/ Manual Steering	8120221K
7	Seal, Sector Shaft	1965-86	SJ, J-Series	w/ Manual Steering	J4486140
8	Bushing, Sector Shaft	1965-86	SJ, J-Series	w/ Manual Steering	J3200496
9	Seal, Worm Shaft	1965-86	SJ, J-Series	w/ Manual Steering	J4486141
10	Bearing Cup, Worm Shaft	1965-86	SJ, J-Series	w/ Manual Steering; 2 Required	J3200492
11	Bearing, Worm Shaft	1965-86	SJ, J-Series	w/ Manual Steering; 2 Required	J3200491
12	Steering Shaft Assembly	1976-85 1976-85	SJ, J-Series SJ, J-Series	w/ Manual Steering w/ Power Steering	J5353135 J5354934
13	Coupling, Steering Shaft	1973-85 1974-85	SJ, J-Series SJ, J-Series	w/ Manual Steering w/ Power Steering	J8121299 J0998710
14	Cap, Steering Reservoir	1975-91	SJ, J-Series		8128467
15	Pump, Power Steering	1975-91	SJ, J-Series	w/ Attached Reservoir	52037568
16	Hose, Power Steering Pressure	1975-78 1980-86 1972-79 1980-91	SJ, J-Series SJ, J-Series SJ, J-Series SJ, J-Series	4.2L (6-258) 4.2L (6-258) 5.9L (V8-360), 6.6L (V8-401) 5.9L (V8-360)	J5355891 52003769 J5355891 52003079
17	Hose, Power Steering Return	1976-79 1976-79 1980-91	SJ, J-Series SJ, J-Series SJ, J-Series	4.2L (6-258) 5.9L (V8-360), 6.6L (V8-401) 4.2L (6-258)	J5357190 J5357190 J5370025 *
18	Ball Joint, Upper	1974-91	SJ, J-Series		J8122495
19	Ball Joint, Lower	1974-91	SJ, J-Series		J8122496
20	Spindle, Steering	1971-73 1977-91	SJ, J-Series SJ, J-Series	Left or Right, w/ Dana 30 Front Axle Includes Bearings Washer and Seals	J8121403 J8128767

* Not Currently Available

Continued On Next Page

Copyright © 2014 Crown Automotive Sales Co., Inc. All rights reserved.

Steering Linkage, (Continued)
Front Mounted Steering Gear

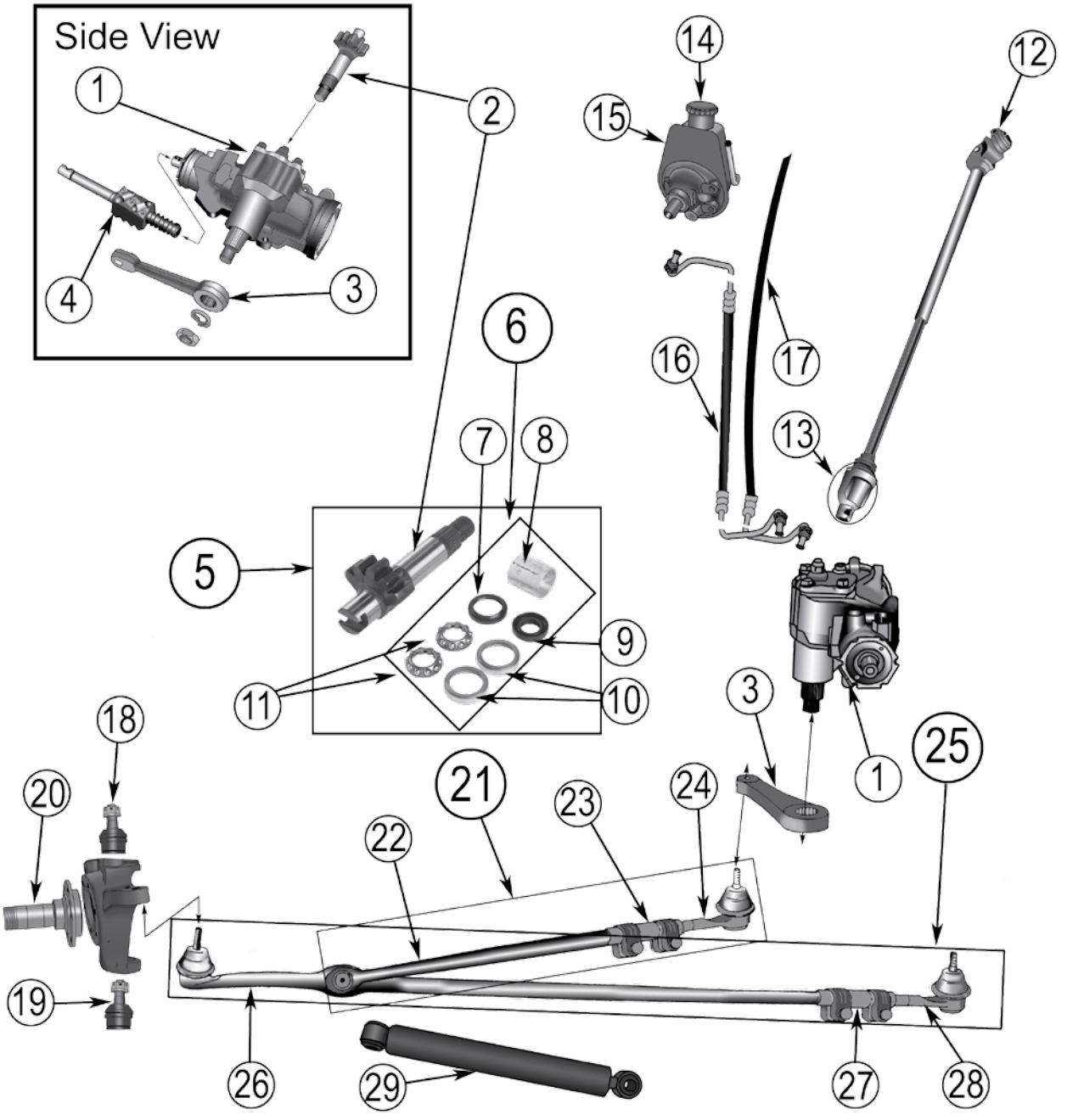

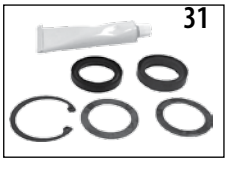

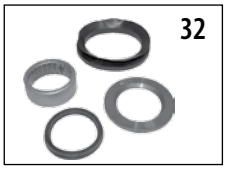

Copyright © 2014 Crown Automotive Sales Co., Inc. All rights reserved.

Steering Linkage, Front Mounted Steering Gear (Continued)

Item #	Description	Years	Application	Comments	Replaces Part #
21	Drag Link Assembly	1974-89 1974-91	SJ, J-Series SJ, J-Series	28-3/8" Collapsed Length 26-3/8" Collapsed Length	J5352421 J5352163
22	Right Tie Rod End, Drag Link	1962-72 1962-73 1962-73 1974-91 1974-89	SJ, J-Series J-Series SJ SJ, J-Series SJ, J-Series	To Steering Knuckle; 3-1/8" Long; Right Hand Threads; w/ Hollow Adjusting Tube To Steering Knuckle; 32-5/16" Long; Right Hand Threads; w/ Solid Tube To Steering Knuckle; 29-3/8" Long; Right Hand Treads; w/ Solid Tube Drag Link to Tie Rod, 21.88" Long Drag Link to Tie Rod, 23.88" Long	J0932192 J0999200 J0999199 * J8123315 J8123316
23	Adjuster, Drag Link	1972-73 1974-91	SJ, J-Series SJ, J-Series	4-1/2" Long; 1/2" - 20 Threads 4-1/2" Long; 9/16" - 18 Threads	J3200671 J8123320
24	Left Tie Rod End, Drag Link	1974-91	SJ, J-Series	At Pitman Arm; 3-3/4" Long; Left Hand Threads	J8124817
25	Tie Rod Assembly	1974-89 1974-91	SJ, J-Series SJ, J-Series	55-3/4" Collapsed Length 51-3/4" Collapsed Length	J5352680 J5352665
26	Right Tie Rod End, Tie Rod	1971-73 1974-89 1974-91	SJ SJ, J-Series SJ, J-Series	3-1/8" Long; Right Hand Threads 50-1/2" Long 46-1/2" Long	J0932192 J8124823 J8124816
27	Adjuster, Tie Rod	1974-91	SJ, J-Series		J8124819 *
28	Left Tie Rod End, Tie Rod	1971-73 1974-91	SJ SJ, J-Series	3-7/8" Long; Left Hand Threads 3-1/8" Long; Left Hand Threads	J0932191 J8124817
29	Stabilizer, Steering	1974-91	SJ, J-Series		J8129434
30	Ball Joint Kit	1974-91	SJ, J-Series	Upper & Lower, Includes Hardware	J8126509
31	Seal Kit, Gear Assembly	1973-91 1973-91	SJ, J-Series SJ, J-Series	Sector Shaft (Pitman), w/ Power Steering Valve Assembly, w/ Power Steering	J8134568 J3204833
32	Bearing & Seal Kit, Spindle	1974-91	SJ, J-Series	Left or Right, Includes Bearing & Seals	J8127356
33	Steering Column Bearing Kit	1974-91	SJ, J-Series	Includes 2 Bearings, 1 Clip, and 1 Retainer	4487696K
34	Boot Kit, Steering Shaft	1974-86	SJ, J-Series	Includes 1 Boot, 2 Clips & 2 Bearings	8132676K
35	Steering Shaft Coupling Kit	1974-86 1973-86	SJ, J-Series SJ, J-Series	w/ Power Steering w/ Manual Steering	998710K 8121299K

* Not Currently Available

Copyright © 2014 Crown Automotive Sales Co., Inc. All rights reserved.

Steering Linkage
Rear Mounted Steering Gear

1966-1971 C101 Commando

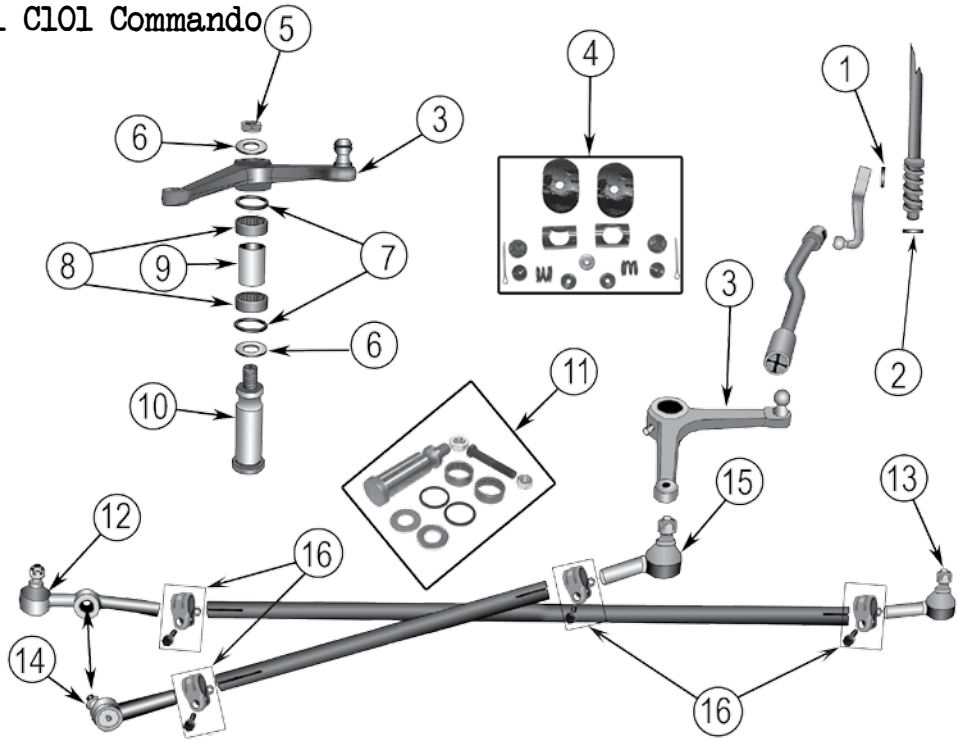

Item #	Description	Comments	Replaces Part #
1	Seal, Worm Shaft		J3202618
2	Seal, Sector Shaft		J0940555
3	Bellcrank	1-1/8"	J0946965
4	Repair Kit, Drag Link	Includes plugs, seals, springs, and cotter pins	J0923418
5	Nut, Bellcrank Shaft	w/ 3/4" & 7/8" Shaft	J0649240
6	Washer, Bellcrank Shaft	5/8" 7/8"	J0131016 J0131018
7	Seal, Bellcrank Shaft	2 Required	J0645663
8	Bearing, Bellcrank Shaft	2 Required	J0928099
9	Spacer, Bellcrank Shaft	w/ 7/8" Diameter Shaft	J0645662
10	Shaft, Bellcrank	7/8" Diameter 1-1/8" Diameter	J0914223 J0946968
11	Repair Kit, Bellcrank	w/ 7/8" Diameter Shaft w/ 1-1/8" Diameter Shaft	J0920556 J0991381
12	Tie Rod End, On Wheel to Wheel Rod	Right Side with Hole	J0920536
13	Tie Rod End, On Wheel to Wheel Rod	Left Side; Right Hand Thread	J8136600
14	Tie Rod End, On Bellcrank to Steering Arm Rod	Left Thread	J8136674
15	Tie Rod End, On Bellcrank to Steering Arm Rod	Right Thread	J8136600
16	Clamp Kit, Tie Rod	Includes clamp and hardware	JA000837

Copyright © 2014 Crown Automotive Sales Co., Inc. All rights reserved.

Steering Linkage
Rear Mounted Steering Gear

1946-1965 Willys Station Wagons, Sedan Delivery Wagons and Pickup Trucks

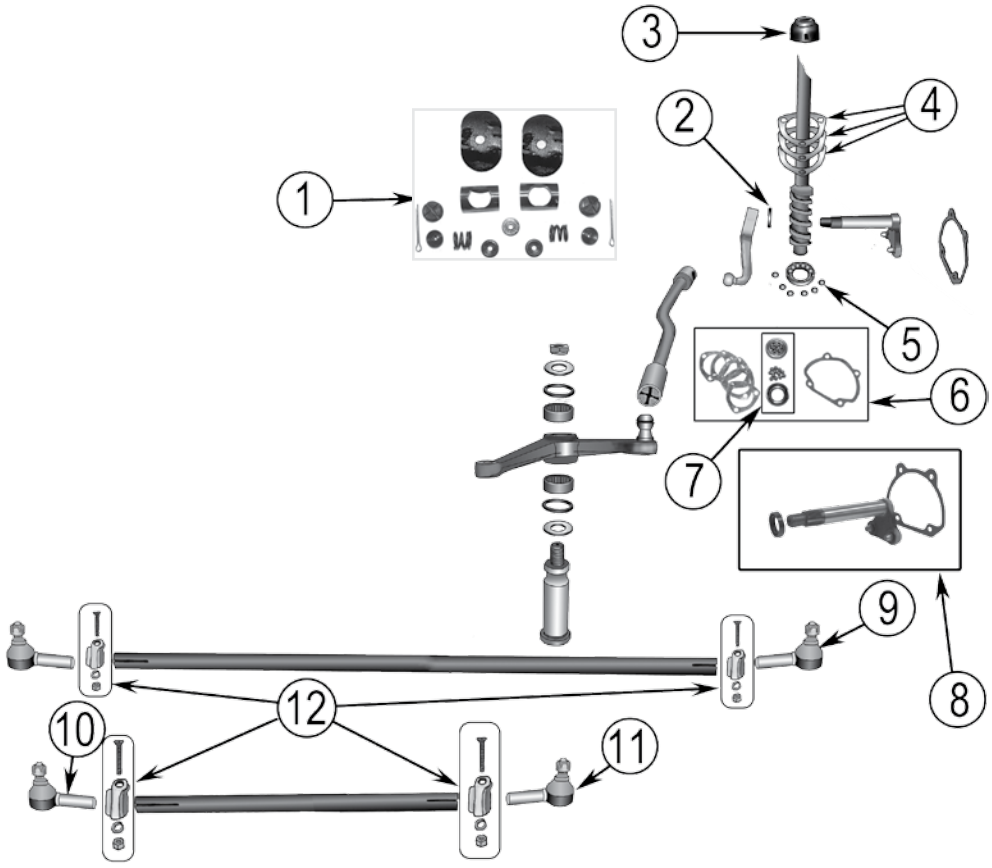

Item #	Description	Application/Comments	Replaces Part #
1	Repair Kit, Drag Link	Includes Plugs, Seals, Springs, and Cotter Pins	J0923418
2	Seal, Sector Shaft	All	907653
3	Bearing, Steering Column	Upper	J0801422
4	Shim Set, Steering Worm Shaft	All	A6760
5	Ball Bearing, Worm Shaft	22 Required (11 Upper and 11 Lower)	J0639104
6	Repair Kit, Bearing Steering Gear Worm	Includes Bearings, Races, Shims, and Side Cover Gasket	J0646084
7	Bearing Kit, Worm Shaft	Includes Bearings, Races, Shims, and Side Cover Gasket	J0942062*
8	Kit, Steering Sector Shaft	w/o Gear Stamped #5-13230	J0907999*
9	Tie Rod End, Steering Knuckle to Steering Knuckle	Left Side; Left Hand Threads	J8136674
10	Tie Rod End, Bellcrank to Right Steering Knuckle	At Knuckle; Left Hand Threads	J8136674
11	Tie Rod End, Bellcrank to Right Steering Knuckle	At Bellcrank; Right Hand Threads	J8136600
12	Clamp Kit, Tie Rod	Includes clamp and hardware	JA000837

* Not Currently Available

Copyright © 2014 Crown Automotive Sales Co., Inc. All rights reserved.

Steering Belts & Hoses

Power Steering Pump Belts

Models	Years	Engine	Comments	Replaces Part #
CJ-5, 7	1980	GM 2.5L (4-151)		G9433652
CJ-5, 7, 8	1981-83	GM 2.5L (4-151)		JY013506
CJ-5, 7, 8	1983-86	AMC 2.5L (4-150)		JY017465
CJ-5, 6, 7	1975-78	3.8L(6-232), 4.2L (6-258)	w/o Exhaust Pump	JY013465
CJ-5, 7, 8	1976-86	3.8L(6-232), 4.2L (6-258)		JY013251
CJ-5, 7,8	1976-81	5.0L (V8-304)	54" Long	JY013541
SJ, J-Series	1968-70	5.8L (V8-350)	w/ A/C	JY013461
SJ, J-Series	1971-72	4.2L (6-258)		JY017465
SJ, J-Series	1974	3.8L(6-232), 4.2L (6-258)	w/o A/C w/ 43" Long Belt	JY013411
SJ, J-Series	1975-78	3.8L(6-232), 4.2L (6-258)	w/o Exhaust Pump	JY017465
SJ, J-Series	1977-86	3.8L(6-232), 4.2L (6-258)		JY017465
SJ, J-Series	1976-91	5.9L (V8-360), 6.6L (V8-401)	54" Long	JY013541

Power Steering Pressure Hoses

Models	Years	Engine	Comments	Replaces Part #
CJ-5, 6	1975	3.8L(6-232), 4.2L (6-258)		J5354381
CJ-5, 6, 7	1976-79	3.8L(6-232), 4.2L (6-258)		J5357191
CJ-5, 7	1980-81	3.8L(6-232), 4.2L (6-258)		J5370018
CJ-5, 7, 8	1982-86	4.2L (6-258)		J5363661
CJ-5, 6	1972-75	5.0L (V8-304)	w/ Left Hand Drive	J5354381
CJ-5, 6, 7	1976-79	5.0L (V8-304)		J5357191
CJ-5, 7, 8	1980-81	5.0L (V8-304)		J5370016
SJ, J-Series	1975-78	4.2L (6-258)		J5355891
SJ, J-Series	1980-86	4.2L (6-258)		52003769
SJ, J-Series	1972-79	5.9L (V8-360), 6.6L (V8-401)		J5355891
SJ, J-Series	1980-91	5.9L (V8-360)		52003079

Power Steering Return Hoses

Models	Years	Engine		Replaces Part #
CJ-5, 7, 8	1980-83	GM 2.5L (4-151)		J5370019
CJ-5, 6	1973-74	3.8L(6-232), 4.2L (6-258)		J5357190
CJ-5, 7	1977-79	3.8L(6-232), 4.2L (6-258)		J5357190
CJ-5, 7	1980	4.2L (6-258)		J5370019
CJ-5, 7, 8	1981-86	4.2L (6-258)		J5363662
CJ-5, 6, 7	1976-79	5.0L (V8-304)		J5357190
CJ-5, 7, 8	1980-81	5.0L (V8-304)		J5370019
C104 Commando	1973-74	4.2L (6-258)		J5357190
SJ, J-Series	1976-79	4.2L (6-258)		J5357190
SJ, J-Series	1976-79	5.9L (V8-360), 6.6L (V8-401)		J5357190

Copyright © 2014 Crown Automotive Sales Co., Inc. All rights reserved.

SUSPENSION

Early Model CJ's
MB, CJ-2A, 3A, 3B 12-2

Late Model CJ's
CJ-5, 6, 7, 8 12-4

Willys Station Wagons, Delivery Sedan
and Pickup 12-6

SJ, J-Series 12-7

C101 Commando 12-8

FC-150, FC-170 12-8

Copyright © 2014 Crown Automotive Sales Co., Inc. All rights reserved.

Early Model CJ's

MB, CJ-2A, 3A, 3B

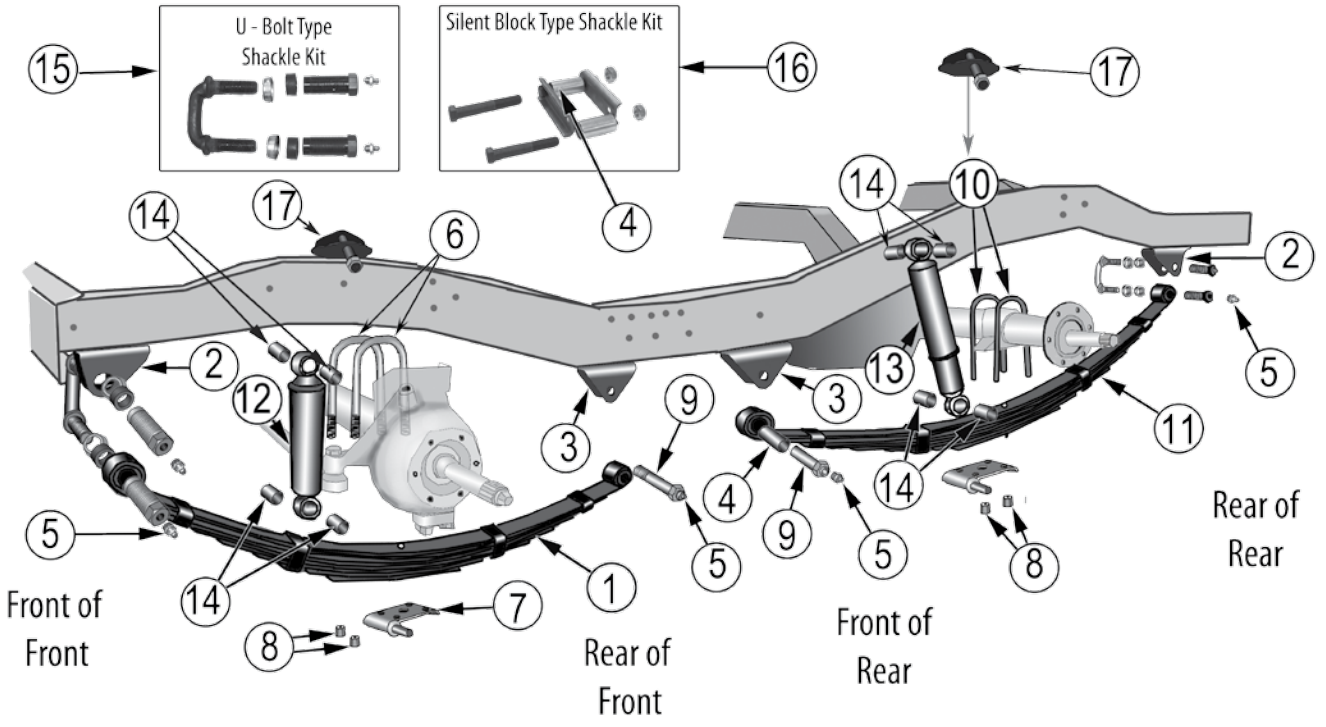

Copyright © 2014 Crown Automotive Sales Co., Inc. All rights reserved.

Early Model CJ's

Item #	Description	Application	Position	Comments	Replaces Part #
1	Leaf Spring Assembly	MB, CJ-2A, 3A All	Front Front	2 bushings pressed in - 8 Leaves 2 bushings pressed in - 10 Leaves	A612 916056
2	Bracket, Leaf Spring Mount	All CJ-3B	Shackle End of Front Spring Shackle End of Front Spring	w/ U-Bolt Shackles w/ Silent Block Shackles	JA000544 J0645966
3	Bracket, Leaf Spring Mount	All	Pivot End of Front or Rear Spring		A500
4	Bushing, Leaf Spring	All CJ-3B All	Shackle End of Front or Rear Spring Shackle End of Front Spring Pivot End of Front or Rear Spring	w/ U-Bolt Shackles; Bronze w/ Silent Block Shackles; Rubber Bronze	J0359039 J0921055 J0359039
5	Fitting, Grease	All	Front or Rear	Threaded	392909
6	U-Bolt, Front	All All		3 Required; 7/16"-20 Threads** 1 Required; 7/16"-20 Threads**	J0909222 J0808988
7	Spring Plate, Front	All All All	Front Left Front Right Front Right	Uses a Nut to Hold Shock On Uses a Cotter Pin to Hold Shock On Uses a Nut to Hold Shock On	J0800823 8132938 A568
8	Nut, U-Bolt	All	Front or Rear	7/16"-20 Threads	J0339372
9	Bolt, Leaf Spring Pivot	All	Front or Rear	Includes Grease Fitting, Nut & Cotter Pin	J0384228
10	U-Bolt, Rear	All	Rear	4 Required**	J0999546
11	Leaf Spring Assembly	All	Rear	2 Bushings Pressed In - 9 Leaves	A614
12	Shock Absorber	CJ-2A, 3A, 3B CJ-2A, 3A, 3B	Front Front	Standard Duty Heavy Duty	910144 J8133290
13	Shock Absorber	CJ-2A, 3A, 3B CJ-2A, 3A, 3B	Rear Rear	Standard Duty Heavy Duty	910144 83500177
14	Bushing, Shock Absorber	All	Front or Rear	4 Required Per Shock	J0637936
15	Shackle Kit	All All All All	Left Front Right Front Left Rear Right Rear	U-Bolt Type; Left Thread U-Bolt Type; Right Thead U-Bolt Type; Right Thead U-Bolt Type; Left Thread	J0802061 J0802062 J0802062 J0802061
16	Shackle Kit	CJ-3B	Front or Rear	Silent Block Type	J0916646
17	Mounting Bracket, Shock Absorber	CJ3A, 3B	Front or Rear, Upper	Includes Nylon Nut	J0805635

** Includes U-Bolt, Washers & Nuts

* Not Currently Available

Copyright © 2014 Crown Automotive Sales Co., Inc. All rights reserved.

Late Model CJ's

CJ-5, 6, 7, 8

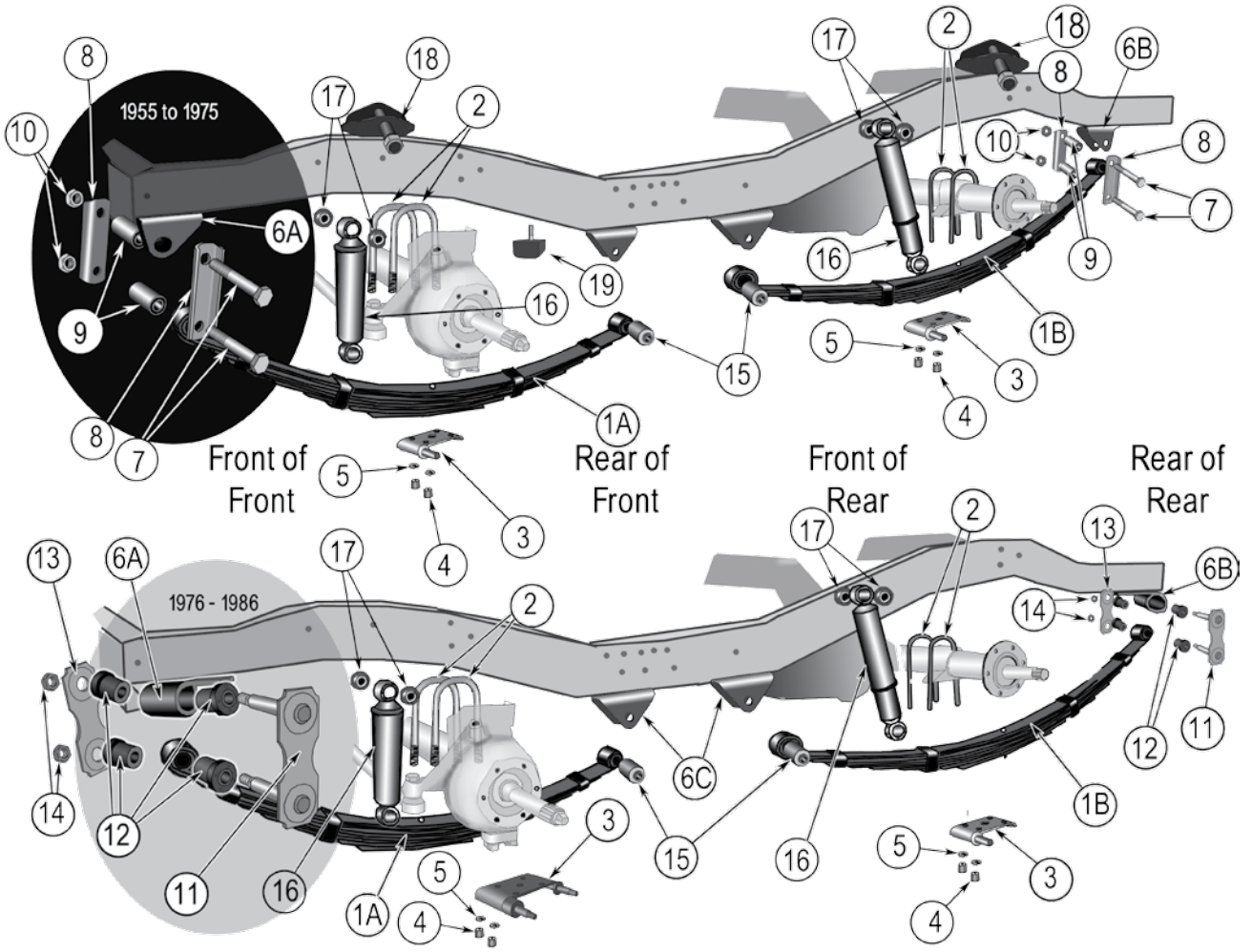

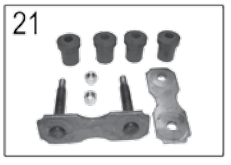

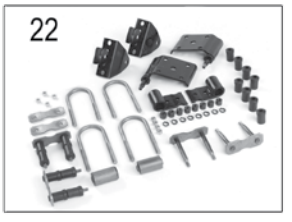

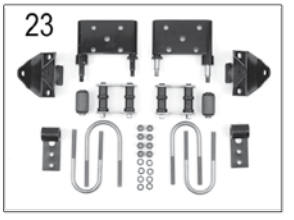

Item #	Description	Application	Position	Comments	Replaces Part #
1A	Leaf Spring Assembly	1955-75 CJ-5, 6 1976-86 CJ-5, 7, 8 1976-86 CJ-5, 7, 8	Front Front Front	7 Leaves; 2 Bushings Pressed In 7 Leaves; 1 Bushing Pressed In 4 Leaves; 1 Bushing Pressed In	J0999529 J5354892 J5363229
1B	Leaf Spring Assembly	1955-75 CJ-5, 6 1976-86 CJ-5, 7, 8 1976-86 CJ-5, 7, 8	Rear Rear Rear	9 Leaves; 2 Bushings Pressed In 9 Leaves; 1 Bushing Pressed In 6 Leaves; No Bushings Pressed In	J0916047 J5356423 J5363331

Copyright © 2014 Crown Automotive Sales Co., Inc. All rights reserved.

Late Model CJ's

2	U-Bolt	1955-71 CJ-5, 6 1955-71 CJ-5, 6 1972-75 CJ-5, 6 1972-75 CJ-5, 6 1976-86 CJ-5, 7, 8 1976-86 CJ-5, 7, 8 1976-86 CJ-5, 7, 8 1986 CJ-7, 8	Front Front Front Front Front Front Rear Rear	3 Required** 1 Required** 3 Required** 1 Required 3 Required, Heavy Duty** 1 Required, Heavy Duty** w/ AMC 20, Heavy Duty** w/ Dana 44**	J0909222 J0808988 J0999546 J0999545 8130369HD 8130370HD 8130370HD 999210
3	Plate, Spring	1976-86 CJ-5, 7, 8 1976-86 CJ-5, 7, 8 1976-86 CJ-5, 7, 8 1976-86 CJ-5, 7, 8	Left Front Right Front Left Rear Right Rear		J5359011 J5359012 J5363439 J5363440
4	Nut, U-Bolt	1955-75 CJ-5, 6 1976-86 CJ-5, 7, 8	Front or Rear Front or Rear	7/16"-20 Threads 1/2"-20 Threads	J0339372 JA014709
5	Lock Washer, U-Bolt	1976-86 CJ-5, 7, 8	Front or Rear	1/2"	J5350644
6A	Bracket, Spring	1955-75 CJ-5, 6 1976-86 CJ-5, 7, 8	Front Front	Shackle End Shackle End	J0645966 J5355689
6B	Bracket, Spring	1955-75 CJ-5, 6 1976-86 CJ-5, 7, 8	Rear Rear	Shackle End Shackle End	J0645966 J5355281
6C	Bracket, Spring	1976-86 CJ-5, 7, 8	Front or Rear	Pivot End	J8127712
7	Bolt, Shackle	1955-75 CJ-5, 6	Front or Rear	7/16"-20	809236
8	Plate, Shackle	1955-75 CJ-5, 6	Front or Rear	2 Required Per Shackle	J0645964
9	Bushing, Shackle	1955-75 CJ-5, 6	Front or Rear	2 Required Per Shackle	J0921055
10	Nut, Shackle	1955-75 CJ-5, 6	Front or Rear	7/16" Lock Nut	272712
11	Shackle	1976-86 CJ-5, 7, 8 1976-86 CJ-5, 7, 8	Front Rear		J5357620 J5357499
12	Bushing, Shackle	1976-86 CJ-5, 7, 8 1976-86 CJ-5, 7, 8	Front Rear	2 Required Per Eye 2 Required Per Eye	J5355966 J5355841
13	Plate, Shackle	1976-86 CJ-5, 7, 8	Front or Rear	1 Required Per Shackle	J5357497
14	Nut, Locking, Shackle	1976-86 CJ-5, 7, 8	Front or Rear	2 Required Per Shackle	G9416532
15	Bushing, Spring Eye	1955-75 CJ-5, 6 1974-75 CJ-5, 6 1976-86 CJ-5, 7, 8 1976-86 CJ-5, 7, 8	Front or Rear Rear Front; Pivot End Rear; Pivot End	1-13/16" Wide 2-3/64" Wide	J0921055 J5352659 J5353851 J5355369
16	Shock Absorber	1955-86 CJ-5, 6, 7, 8 1955-86 CJ-5, 6, 7, 8 1955-86 CJ-5, 6, 7, 8	Front Rear Front	Severe Duty Heavy Duty Heavy Duty	83500176 83500177 J8133290
17	Bushing, Shock Absorber	1955-86 CJ-5, 6, 7, 8	Front or Rear	2 Required Per Eye	J0637936
18	Mounting Bracket, Shock Absorber	CJ3A, 3B	Front or Rear, Upper	Includes Nylon Nut	J0805635
19	Bump Stop	1955-71 CJ5, 6	Front	Bolts to Bracket on Frame & Contacts Leaf Spring	J0931263
20	Shackle Kit	1955-75 CJ-5, 6	Front or Rear	Includes 7, 8, 9, 10	J0916646
21	Shackle Kit	1976-86 CJ-5, 7, 8 1976-86 CJ-5, 7, 8	Front Rear	Includes 11, 12, 13, 14 Includes 11, 12, 13, 14	5357620K 5357499K
22	Complete Mounting Kit	1976-86 CJ-5, 7, 8	Rear	Includes 2, 3, 4, 5, 6A, 6B, 6C, 19	5359007K
23	Complete Mounting Kit	1976-86 CJ-5, 7, 8	Front	Includes 2, 3, 4, 5, 6A, 6B, 6C, 19	5359011K

** Includes U-Bolt, Washers & Nuts

Copyright © 2014 Crown Automotive Sales Co., Inc. All rights reserved.

Willys Station Wagon, Delivery Sedan & Pickup

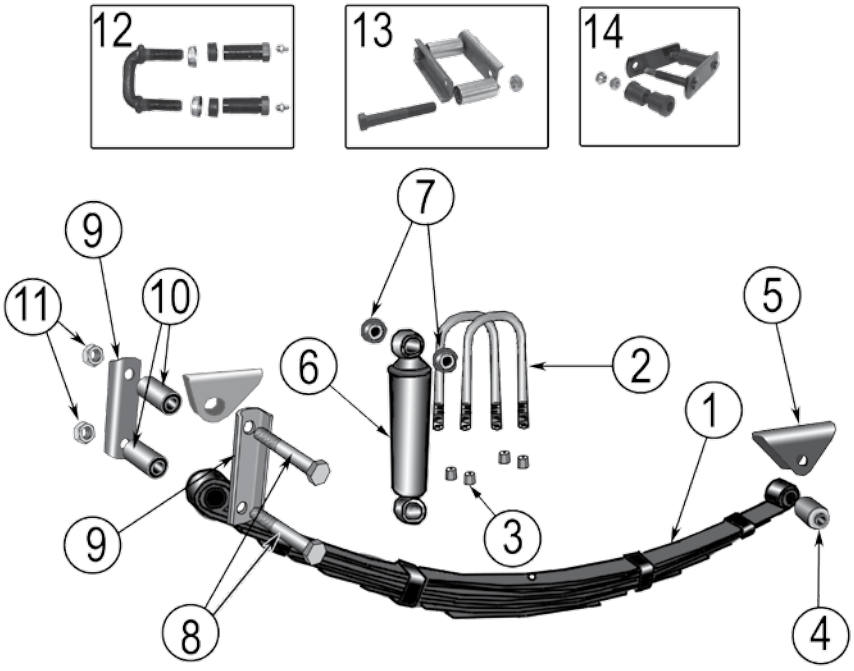

Item #	Description	Position	Comments	Replaces Part #
1	Leaf Spring Assembly	Front	w/ 4 Wheel Drive; 10 Leaves	916056
2	U-Bolt	Front Front Rear	w/ 4 Wheel Drive; 1 per vehicle w/ 4 Wheel Drive; 3 per vehicle	J0644418 J0644419 J0999546
3	Nut, U-Bolt	All	7/16"-20 Threads	J0339372
4	Bushing, Leaf Spring	Front Spring; Pivot End Front Spring; Shackle End Rear Spring, Pivot or Shackle End	Rubber Bronze w/ 4 Wheel Drive	J0921055 J0359039 J0648594
5	Bracket, Spring Shackle	Front or Rear Front or Rear	w/ U-Bolt Shackles w/ Silent Block Shackles	JA000544 J0645966
6	Shock Absorber	Front Rear	Standard Duty Heavy Duty	J8133290 909680
7	Bushing, Shock Absorber	Front or Rear	2 Required per eye	J0637936
8	Bolt, Shackle	Front or Rear	w/ Silent Block Shackles	809236
9	Plate, Shackle	Front or Rear	w/ Silent Block Shackles	J0645964
10	Bushing, Shackle	Front or Rear	w/ Silent Block Shackles	J0921055
11	Nut, Shackle	Front or Rear	Locking; w/ Silent Block Shackles	272712
12	Shackle Kit	Left Front Right Front Left Rear Right Rear	Left Thread (U-Bolt Style) Right Thread (U-Bolt Style) Right Thread (U-Bolt Style) Left Thread (U-Bolt Style)	J0802061 J0802062 J0802062 J0802061
13	Shackle Kit	Front	w/ Silent Block Shackles	J0916646
14	Shackle Kit	Rear	w/ Silent Block Shackles	J0928763

Copyright © 2014 Crown Automotive Sales Co., Inc. All rights reserved.

SJ, J-Series

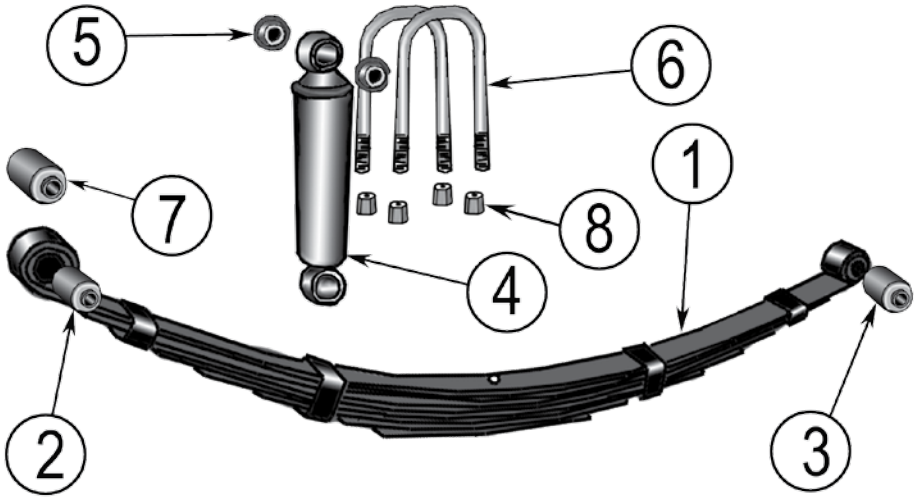

Item #	Description	Application	Location	Comments	Replaces Part #
1	Leaf Spring Assembly	1976-91 SJ 1976-91 SJ	Rear Front	5 Leaves, Includes Bushings; Heavy Duty 4 Leaves, Includes Bushings; Heavy Duty	J5362956 J5362950
2	Bushing, Leaf Spring	1963-64 SJ 1965-75 SJ, J-Series 1976-77 SJ, J-Series 1977 SJ, J-Series 1978-91 SJ, J-Series 1962-91 SJ, J-Series	Front Spring, Shackle End Front Spring, Shackle End Front Spring, Shackle End Front Spring, Shackle End Front Spring, Shackle End Rear Spring, Shackle End	 w/ 1-1/2" O.D. Bushing w/ 1-1/4" O.D. Bushing	J0930522 J0944871 J0944871 J0944870 J0944870 J0944870
3	Bushing, Leaf Spring	1963-73 SJ 1974-75 SJ, J-Series 1976-77 SJ, J-Series 1977-90 SJ, J-Series 1977-91 SJ, J-Series 1974-75 SJ, J-Series 1976-78 SJ 1976-80 J-Series 1976-80 J-Series 1979-90 SJ 1979-91 SJ	Front Spring, Pivot End Front Spring, Pivot End Front Spring, Pivot End Front Spring, Pivot End Front Spring, Pivot End Rear Spring, Pivot End Rear Spring, Pivot End Rear Spring, Pivot End Rear Spring, Pivot End Rear Spring, Pivot End Rear Spring, Pivot End	 w/ 1-1/4" O.D. Bushing w/ 1-1/2" O.D. Bushing w/ 2" O.D. Bushing w/ 1-1/2" O.D. Bushing w/ 2" O.D. Bushing w/ 2-3/64" Long Bushing w/ 1-13/16" Long Bushing	J0944870 J5352250 J5352250 J5355369 J5358985* J5352249 J5355369 J5355369 J5358985* J5355369 J5358985*
4	Shock Absorber	1974-91 SJ, J-Series 1974-91 SJ, J-Series	Front Rear	Heavy Duty Heavy Duty	83500176 83503693
5	Bushing, Shock Absorber	1963-91 SJ, J-Series	Front or Rear		J0637936
6	U-Bolts	1974-91 SJ, J-Series 1974-91 SJ, J-Series		9/16"-18 Thread, 3.75" Wide 9/16"-18 Thread, 3.40" Wide	J5352088 J8129475
7	Bushing, Shackle	1973 SJ 1974-91 SJ, J-Series 1976-91 J-Series	Front or Rear Front Rear	2-3/4" Long; 9/16" I.D.	J0944870 J5352079 J5352079
8	Nut, U-Bolt	1974-91 SJ	Front or Rear	9/16"-18 Thread	J9420350

* Not Currently Available

Copyright © 2014 Crown Automotive Sales Co., Inc. All rights reserved.

C101, C104 Commando

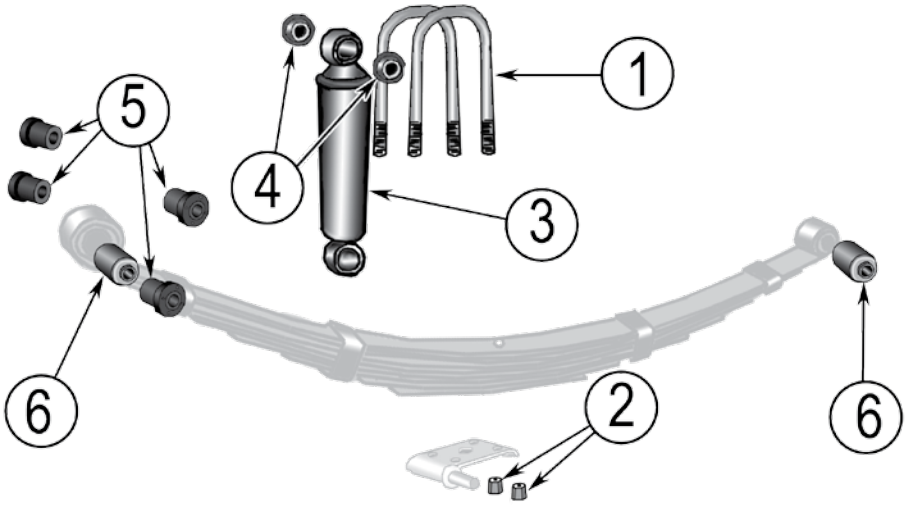

Item #	Description	Model	Location	Comments	Replaces Part #
1	U-Bolt	C101 C104 C101, C104 C101, C104	Rear Rear Front Front	4 Required, Includes Nuts & Washers 4 Required, Includes Nuts & Washers 1 Required, Includes Nuts & Washers 3 Required, Includes Nuts & Washers	J0999546 999210 J0808988 J0999546
2	Nut, U-Bolt	C101, C104	Front or Rear	7/16"-20 Threads	J0339372
3	Shock Absorber	C101 C104 C104	Front or Rear Front Rear	w/ Rear Mounted Steering Gear; Heavy Duty Heavy Duty Heavy Duty	J8133290 J8133290 83500177
4	Bushing, Shock Absorber	C101, C104	Front or Rear	2 Required Per Eye	J0637936
5	Bushing, Shackle	C101 C104	Front Rear	2 Required Per Eye 2 Required Per Eye	J0648594 J5355841
6	Bushing, Leaf Spring	C101, C104	Front Spring, Shackle End		J0992010

FC-150, FC-170

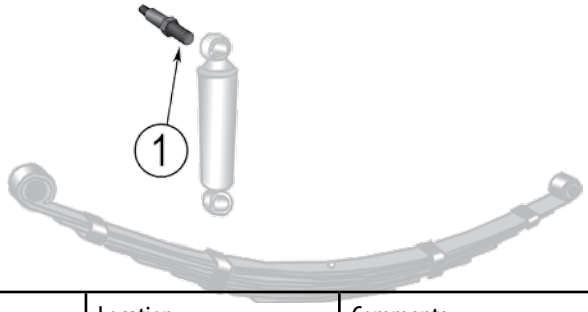

Item #	Description	Location	Comments	Replaces Part #
1	Mounting Stud, Shock Absorber	Rear or Rear		J0912703

Copyright © 2014 Crown Automotive Sales Co., Inc. All rights reserved.

Wiper Components

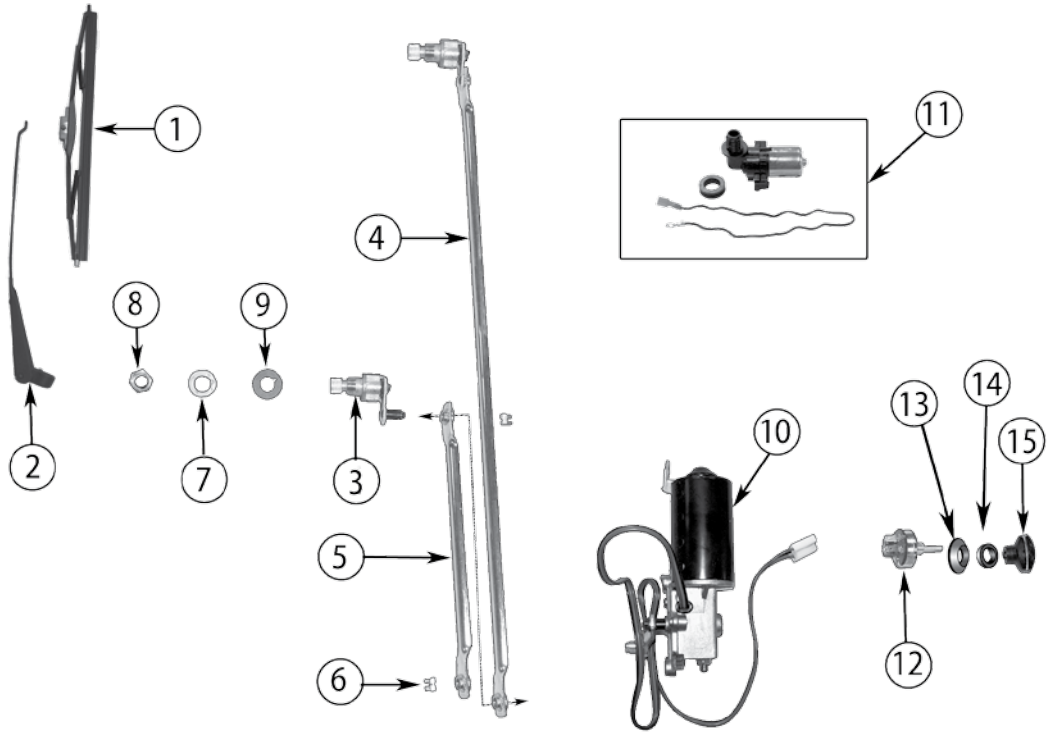

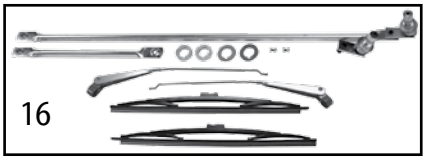

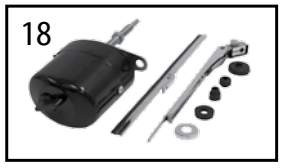

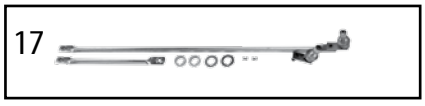

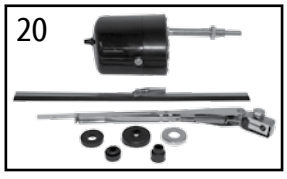

Item #	Description	Years / Model	Position	Comments	Replaces Part #
1	Blade, Wiper, Front	1981-86 CJ-5, 7, 8 1968-80 CJ-5, 6, 7 1979-91 SJ, J-Series	L or R L or R L or R	Black - 11" (New Style) Stainless - 11" (Original Style) 16"	83505426 J0973819 56002292
2	Arm, Wiper, Front	1968-86 CJ-5, 6, 7, 8 1968-86 CJ-5, 6, 7, 8 1979-91 SJ, J-Series	L or R L or R Left	Stainless Black	J5758005 J5762337 55155649
3	Pivot	1976-86 CJ-5, 7, 8	Left	Less Rod	J5453957
4	Pivot Assembly	1976-86 CJ-5, 7, 8	Right	Including Rod, 24" Long.	J5453958
5	Link	1976-86 CJ-5, 7, 8		To Wiper Motor	J5453960
6	Clip, Retaining	1974-86 CJ-5, 6, 7, 8 1981-91 SJ, J-Series			J0957868 J0957868
7	Spacer, Wiper Pivot	1968-86 CJ-5, 6, 7, 8			J5459081

Continued on next page

Copyright © 2014 Crown Automotive Sales Co., Inc. All rights reserved.

Wiper Components (Continued)

Item #	Description	Years / Model	Position	Comments	Replaces Part #
8	Nut, Wiper Pivot	1968-86 CJ-5, 6, 7, 8			J4005672
9	Gasket, Wiper Pivot	1968-86 CJ-5, 6, 7, 8			J0973658
10	Motor, Wiper, Front	1968-75 CJ-5, 6	w/ Bottom-Mount, w/ 3 Wire Plug		J0978529
		1976-83 CJ-5, 7, 8	w/ 3 Wire Plug		J5453956
		1983-86 CJ-5, 7, 8	w/ 4 Wire Plug		J5763696
		1981-86 SJ, J-Series			J5758467
11	Pump, Windshield Washer	1972-86 CJ-5, 6, 7, 8			36001132
12	Switch, Wiper	1968-82 CJ-5, 6, 7, 8			J5460089
		1983-86 CJ-5, 7, 8	w/o Intermittent Wiper		J5758687
		1983-86 CJ-5, 7, 8	w/o Intermittent Wiper		J5758687
		1981-85 SJ, J-Series	w/ Intermittent Wiper		J5758904 *
		1981-85 SJ, J-Series	w/ Intermittent Wiper		J5758904 *
		1986-88 SJ, J-Series	w/ Floor Shift, w/ Intermittent, w/o Tilt Wheel		56000031
		1986-91 SJ, J-Series	w/ Intermittent Wiper, w/ Tilt Wheel		56007299
13	Bezel, Wiper Switch	1968-86 CJ-5, 6, 7, 8	Wiper		J0987911
14	Nut, Wiper Switch	1968-86 CJ-5, 6, 7, 8	Wiper		J4000056
15	Knob, Wiper Switch	1968-86 CJ-5, 6, 7, 8	OEM Style		J5459189
		1981-86 SJ, J-Series	OEM Style		J5459189
		1968-86 CJ-5, 6, 7, 8	Aluminum		5459189AL
		1981-86 SJ, J-Series	Aluminum		5459189AL
		1968-86 CJ-5, 6, 7, 8	Black Aluminum		5459189B
		1981-86 SJ, J-Series	Black Aluminum		5459189B
Crown Kits					
16	Wiper Linkage Master Kit	1976-86 CJ-5, 7, 8	Includes: Wiper Blades (New Style), Stainless Wiper Arms, Left and Right Wiper Links, Left and Right Wiper Pivots, Wiper Pivot Spacers, Gaskets, Retaining Clips, and Nuts		5453958KM
17	Wiper Linkage Kit	1976-86 CJ-5, 7, 8	Includes: Left and Right Wiper Links, Left and Right Wiper Pivots, Wiper Pivot Spacers, Gaskets, Retaining Clips, and Nuts		5453958K
18	12 Volt Wiper Motor Kit	1941-45 MB 1945-58 CJ-2A, 3A, 3B, 5, 6 1952 M38 1952-53 M38-A1	Black Includes Motor, Arm, Blade, and Mounting Grommets		12V
19	12 Volt Wiper Motor Kit Stainless	1941-45 MB 1945-58 CJ-2A, 3A, 3B, 5, 6 1952 M38 1952-53 M38-A1	Stainless Steel Includes Motor, Arm, Blade, Mounting Grommets and Wiring for Toggle Switch		12VST
20	6 Volt Wiper Motor Kit	1941-45 MB 1945-58 CJ-2A, 3A, 3B, 5, 6	Black Includes Motor, Arm, Blade, and Mounting Grommets		6V

*Not Currently Available

Copyright © 2014 Crown Automotive Sales Co., Inc. All rights reserved.

TRANSMISSION

Model T14
Borg-Warner 3-Speed Transmission. 14-2

Model T15
Borg-Warner 3-Speed Transmission. 14-4

Model T18
Borg-Warner 4-Speed Transmission 14-6

Model T84
Borg-Warner 3-Speed Transmission. 14-8

Model T85
Borg-Warner 3-Speed Transmission 14-10

Model T86
Borg-Warner 3-Speed Transmission. 14-12

Model T90
Borg-Warner 3-Speed Transmission. 14-14

Model T98
Borg-Warner 4-Speed Transmission. 14-16

Model T4
Borg-Warner 4-Speed Transmission. 14-18

Model T5
Borg-Warner 5-Speed Transmission. 14-20

Model SR4
Borg-Warner 4-Speed Transmission. 14-24

Model T150
Tremec 3-Speed Transmission 14-36

Model T176 & T177
Tremec 4-Speed Transmissions 14-30

Model AX4 & AX5
Aisin-Warner 4 & 5-Speed Transmissions 14-34

Copyright © 2014 Crown Automotive Sales Co., Inc. All rights reserved.

Model T14

Borg-Warner 3-Speed Transmission

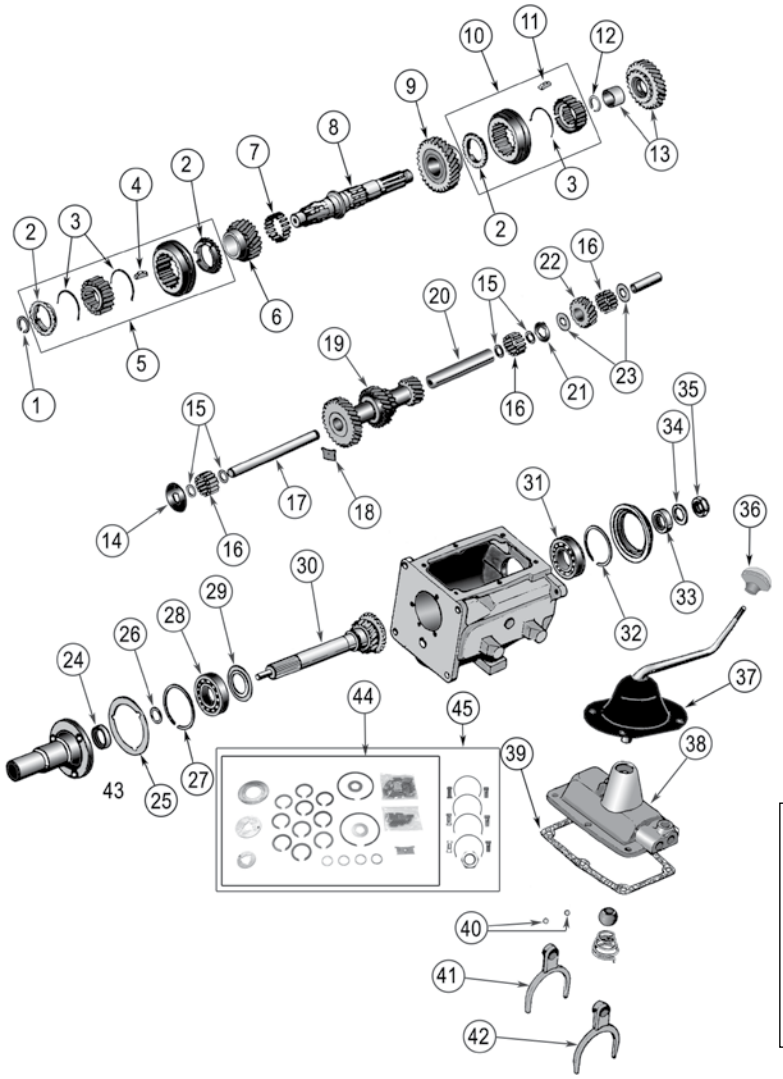

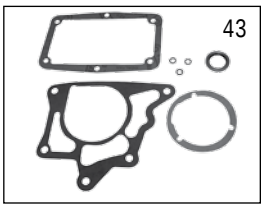

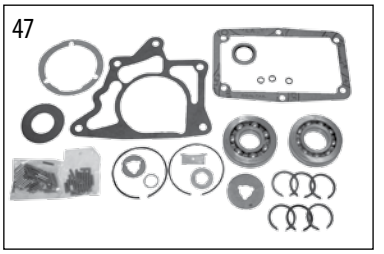

Item #	Description	Comment	Replaces Part #
1	Snap Ring, Synchronizer	.118" Thick .121" Thick .124" Thick .127" Thick .130" Thick	J0991022 J0991023 J3186262 J3186263 J0991066
2	Blocking Ring, Synchronizer	1st, 2nd, and 3rd Gear	J0991020
3	Spring, Synchronizer	1st, 2nd, and 3rd Gear	J3193236
4	Plate, Synchronizer	1st, 2nd, and 3rd Gear	J3192412
5	Synchronizer Assembly - 2nd & 3rd	All Except Tag # AS9-T14A, 13-02-047 Tag # AS9-T14A, 13-02-047	J0948991 J0991014
6	Gear, 2nd Speed	V6-225 Engine; S21-L26 Teeth 3.8L (6-232) and 4.2L (6-258) Engines; S21-L27 Teeth	J0991018 J8124644
7	Roller Bearing, Mainshaft Pilot	21 Required	J3208152
8	Mainshaft	10-7/8" Long; S10-10-10 Splines	J0991012
9	Gear, 1st	S21-L30 Teeth	J0991026
10	Synchronizer Assembly - 1st & Reverse		J0948992
11	Plate, Synchronizer	1st Gear	J3192428

Copyright © 2014 Crown Automotive Sales Co., Inc. All rights reserved.

Model T14

Item #	Description	Comment	Replaces Part #
12	Snap Ring, 1st & Reverse Synchronizer	.118" Thick .121" Thick .124" Thick .127" Thick .130" Thick	J0991022 J0991023 J3186262 J3186263 J0991066
13	Gear, Reverse	S21-R28 Teeth	J0991037*
14	Thrust Washer, Countershaft	Front	J3113840
15	Washer, Countershaft Roller Bearing	4 Required	J3219632
16	Roller Bearing, Countershaft	60 Required	J8132403
17	Countershaft		J3192435
18	Plate, Reverse Idler Shaft & Countershaft Lock		J3192369
19	Gear, Cluster	R31-25-15-14 Teeth; Use w/ 2nd Speed Gear w/ S21-L26 teeth; V6-225 engine	J0991043
20	Spacer, Countershaft Roller Bearing		J0991045
21	Thrust Washer, Countershaft	Rear	J3192365
22	Gear, Reverse Idler	L16 Teeth	J3192429
23	Washer, Reverse Idler Gear Roller Bearing	2 Required	J3192427
24	Seal, Input		83300041
25	Gasket, Front Bearing Retainer		J0991062
26	Snap Ring, Front Bearing Retainer	.118" Thick .121" Thick .124" Thick .127" Thick .130" Thick	J0991022 J0991023 J3186262 J3186263 J0991066
27	Snap Ring, Input Shaft Bearing		640782
28	Bearing, Input Shaft		J3184013
29	Washer, Front Bearing Retainer		J3193968
30	Shaft, Input	11-1/2" Long; S21-L20 Teeth; V6-225 Engine 10-1/2" Long; S20-L20 Teeth; 3.8L (6-232) and 4.2L (6-258) Eng.ines	J0991058 J0991059
31	Bearing, Mainshaft	Rear	J0992289
32	Snap Ring, Rear Mainshaft Bearing		J0991077
33	Spacer, Rear Mainshaft Bearing		J0991079
34	Washer, Mainshaft Nut		JA001410
35	Nut, Mainshaft		J8126806
36	Shift Knob	Threaded	J0929393
37	Shift Boot	CJ-5, 7	J0948185
38	Cover, Transmission Case	w/ Tag #: AS7-T14-A, AS11-T14A, 13-02-006, 13-02-007, 13-02-008, 13-02-046, 13-02-047	J0991081
39	Cover Gasket		J0991089
40	Ball, Poppet	5/16" Diameter	453593
41	Fork, Shift, 2nd & 3rd	w/o Tag #: AS1-T14A, 13-02-008, 13-02-014 w/ Tag #: AS1-T14A, 13-02-008, 13-02-014	J3192407 J0948990
42	Fork, Shift, 1st & Reverse	w/o Tag #: AS1-T14A, 13-02-008, 13-02-014 w/ Tag #: AS1-T14A, 13-02-008, 13-02-014	J3192407 J0948990

Crown Kits

43	Gasket & Seal Set	Includes all seals and gaskets	J0991198
44	Small Parts Kit	Include snap rings, retainers, washers, and roller bearings	T14A
45	Small Parts Master Kit	Includes T14A plus mainshaft nut, sync. plates and springs	T14A-MK
46	Blocking Ring Set, Synchronizer	Includes 3 blocking rings	J3209971
47	Installation Kit, Transmission	Includes T14A plus input and mainshaft bearings	T14-BSG

* Not Currently Available

Copyright © 2014 Crown Automotive Sales Co., Inc. All rights reserved.

Model T15

Borg-Warner 3-Speed Transmission

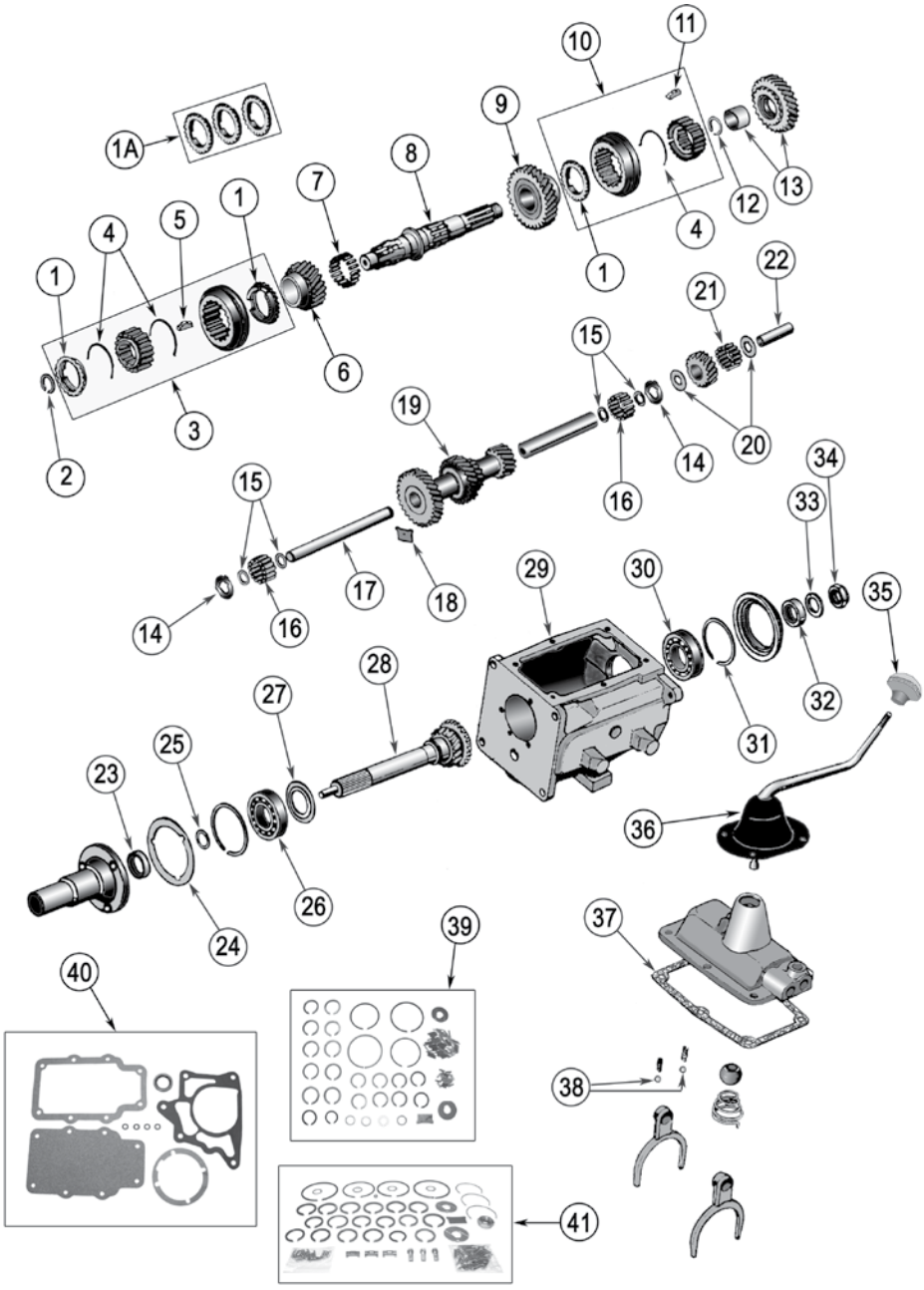

Item #	Description	Comment	Replaces Part #
1	Blocking Ring, Synchronizer	1st, 2nd, and 3rd Gear	J0991021
1A	Blocking Ring, Set, Synchronizer	Set of 3	J3209972
2	Snap Ring, 2nd & 3rd Gear Synchronizer	.118" Thick .121" Thick .124" Thick .127" Thick .130" Thick	J0991022 J0991023 J3186262 J3186263 J0991066
3	Synchronizer Assembly, 2nd & 3rd Gear		J0991014
4	Spring, Synchronizer	1st, 2nd & 3rd Gear	J0991017

Copyright © 2014 Crown Automotive Sales Co., Inc. All rights reserved.

Model T15

Item#	Description	Comment	Replaces Part #
5	Plate, Synchronizer	2nd & 3rd Gear; 3 Required	J3192412
6	Gear, 2nd	S24-L26 Teeth	J0991019*
7	Roller Bearing, Mainshaft	21 Required	J3208152
8	Mainshaft		J0991013
9	Gear, 1st	S24-L29 Teeth	J0991027
10	Synchronizer Assembly, 1st & Reverse		83300035
11	Plate, Synchronizer	1st & Reverse; 3 Required	J3192434
12	Snap Ring, Synchronizer	.125" Thick	J0991030
13	Gear, Reverse	S24-R29 Teeth	J0991038
14	Thrust Washer, Countershaft	Front or Rear	J0941662
15	Washer, Countershaft Roller Bearing	4 Required	J3112993
16	Roller Bearing, Countershaft	44 Required	J4485673
17	Countershaft		J3192422
18	Plate, Reverse Ilder Shaft & Countershaft Lock		J3192372
19	Gear, Countershaft Cluster	R31-22-15-15 Teeth	J0991044
20	Washer, Reverse Idler Gear Roller Bearing		J0944334
21	Roller Bearing, Reverse Idler Gear	22 Required	J4485673
22	Shaft, Reverse Idler Gear		J0991051
23	Seal, Input		83300041
24	Gasket, Front Bearing Retainer		J3192431
25	Snap Ring, Front Bearing Retainer	.118" Thick .127" Thick	J3192351 J0991070
26	Bearing, Input Shaft		J4488141
27	Washer, Front Bearing Retainer		J0640893
28	Shaft, Input	w/ Tag # AS5-T15A, 13-07-005, 13-07-011, 13-07, 012, 13-07-045, 13-07-046; S20 - L20 Teeth; 10-15/16" Long	J0991061*
29	Case, Transmission	w/ Tag # AS1-T15A	J0991009
30	Bearing, Mainshaft	Rear	J0991076
31	Snap Ring, Rear Mainshaft Bearing		J8132430
32	Spacer, Mainshaft Bearing		J0991080
33	Washer, Mainshaft Nut		JA001410
34	Nut, Mainshaft		J8126806
35	Knob, Shifter		J0929393
36	Boot, Shifter	CJ-5, 7	J0948185
37	Gasket, Transmission Cover		J0991090
38	Ball, Poppet		453593

Crown Kits

39	Small Parts Kit	Includes snap rings, retainers, washers, and roller bearings	T15A
40	Gasket & Oil Seal Set	Includes all seals and gaskets	J0991199
41	Small Parts Master Kit	Includes T14A Plus mainshaft nut, synchronizer plates, and springs	T15AMK

* Not Currently Available

Copyright © 2014 Crown Automotive Sales Co., Inc. All rights reserved.

Model T18

Borg-Warner 4-Speed Transmission

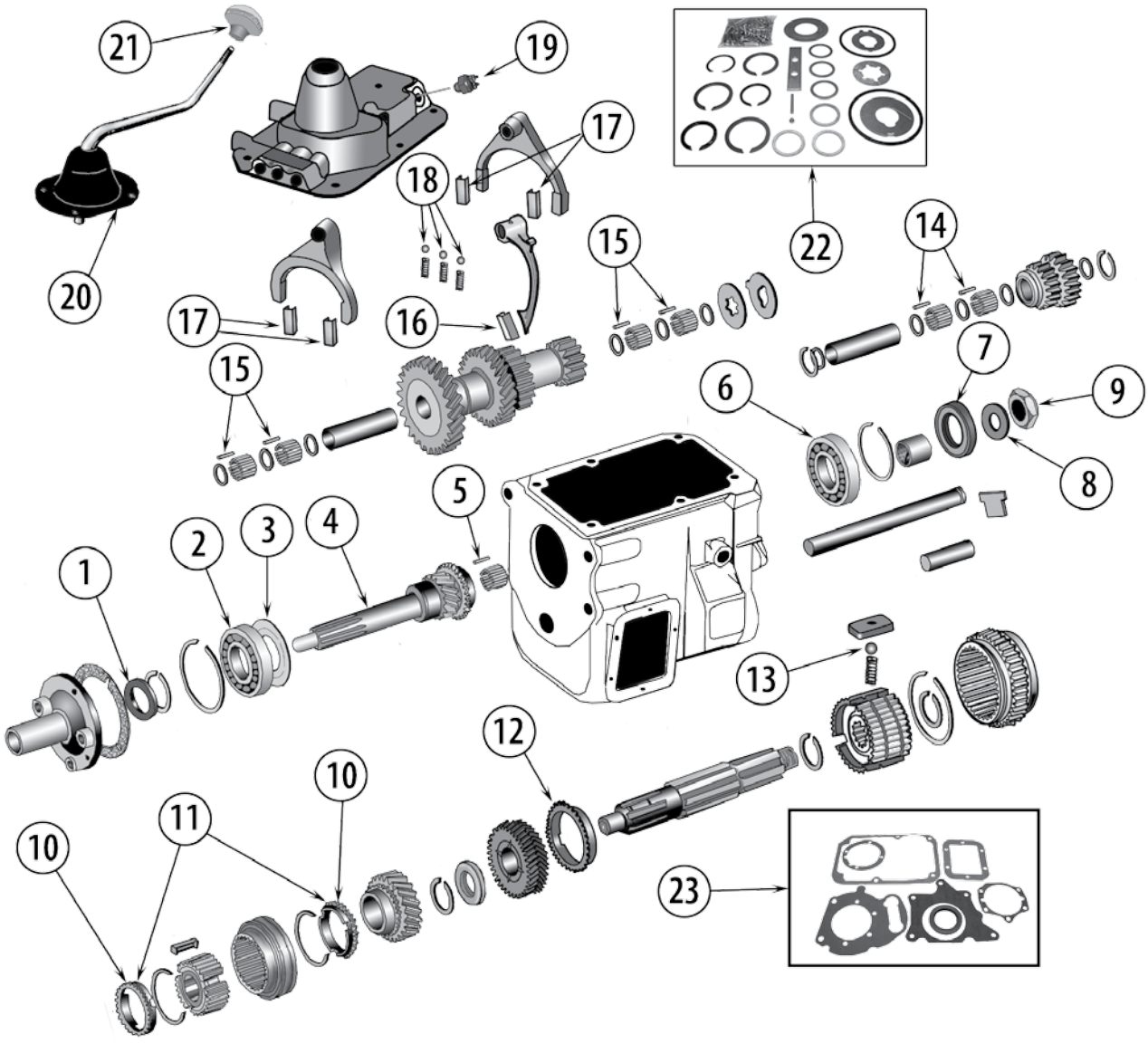

Copyright © 2014 Crown Automotive Sales Co., Inc. All rights reserved.

Model T18

Item #	Description	Comment	Replaces Part #
1	Seal, Input		J8132779
2	Input Shaft Bearing	Front	J4488141
3	Washer, Front Bearing Retainer		J0640893
4	Shaft, Input	CJ-5, 7 w/ Tag #: 13-01-177, 13-01-178	J8128103
5	Roller Bearing, Input Shaft	22 Required	J0912345
6	Bearing, Main Shaft	Rear	J8136623
7	Output Seal		J0939335
8	Washer, Main Shaft Nut		JA001410
9	Nut, Main Shaft		J8126806
10	Blocking Ring, Synchronizer	3rd & 4th Gear	J0912324
11	Blocking Ring Set, Synchronizer	3rd & 4th Gear; Includes 2 Rings	J8130256
12	Blocking Ring, Synchronizer	2nd Gear; Up to 8-22-83	J0912340
13	Ball, Synchronizer	6 Required	453593
14	Roller Bearing, Reverse Idler Shaft	74 Required	J0912354
15	Roller Bearing, Countershaft	88 Required	J0912345
16	Insert, Shift Fork	Reverse	J8130273
17	Insert, Shift Fork	1st & 2nd, 3rd & 4th	8130274
18	Ball, Shift Rail	3 Required	453593
19	Switch, Backup Lamp		J5350061
20	Boot, Shifter	CJ-5, 6 w/ V6-225 Engine	J0948185
21	Shift Knob	74/91 SJ, J-Series	J3241062
22	Small Parts Kit	Includes Bearings, Snap Rings, and Thrust Washers	T18
23	Gasket Set		J0932202

Copyright © 2014 Crown Automotive Sales Co., Inc. All rights reserved.

Model T84

Borg-Warner 3-Speed Transmission

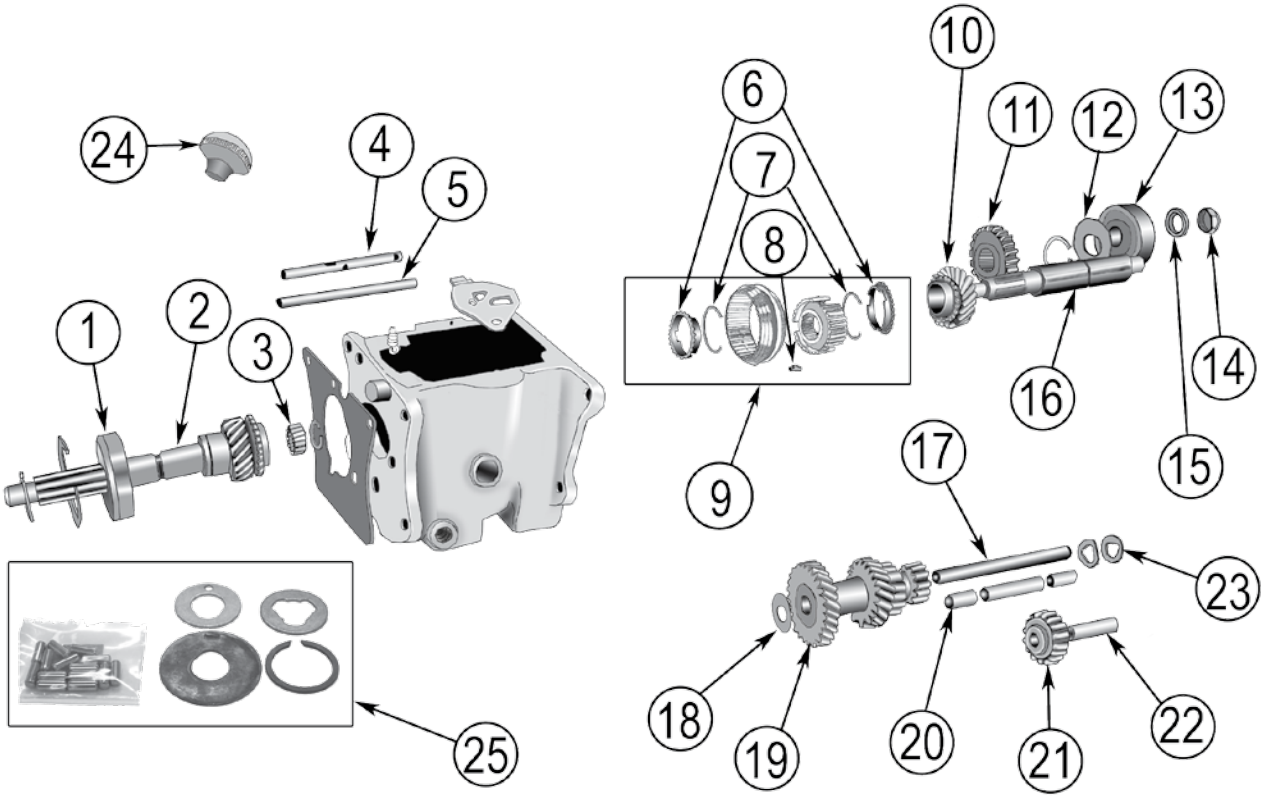

Copyright © 2014 Crown Automotive Sales Co., Inc. All rights reserved.

Model T84

Item #	Description		Replaces Part #
1	Bearing, Input Shaft		J8136622
2	Shaft, Input	8 13/16" Long; S24-L17 Teeth	A5554
3	Roller Bearing, Input Pilot	14 Required	J0639422
4	Shift Rail, 1st & Reverse		A1156
5	Shift Rail, 2nd & 3rd		A1155
6	Blocking Ring, Synchronizer	2nd and 3rd Gear; 2 Reqired	637834
7	Spring, Synchronizer	2nd and 3rd Gear; 2 Reqired	J0637831
8	Plate, Synchronizer	2nd and 3rd Gear; 3 Reqired	J0637832
9	Synchronizer Assembly, 2nd and 3rd Gear		A6318
10	Gear, 2nd	S24-L22 Teeth	638798
11	Gear, 1st & Reverse	S25 Teeth - 6 Splines	636879
12	Slinger, Oil	Rear	A410
13	Bearing, Mainshaft	Rear	A916
14	Nut, Mainshaft		JA000520
15	Washer, Mainshaft Nut		JA001410
16	Mainshaft	9-5/16" Long; S6-6 Splines	A519
17	Countershaft		638948
18	Washer, Countershaft Thrust	Front	635812
19	Gear, Cluster	R29-24-S16-12 Teeth	A739
20	Bushing, Cluster Gear	2 Required	A878
21	Gear, Reverse Idler	S16 Teeth	636882*
22	Shaft, Reverse Idler Gear		638952*
23	Washer, Countershaft Thrust	Rear, Bronze	635811
24	Knob, Shifter		J0914946
Crown Kits			
25	Small Parts Kit	Includes roller bearings, thrust washers, and a snap ring	T84

* Not Currently Available

Copyright © 2014 Crown Automotive Sales Co., Inc. All rights reserved.

Model T85

Borg-Warner 3-Speed Transmission

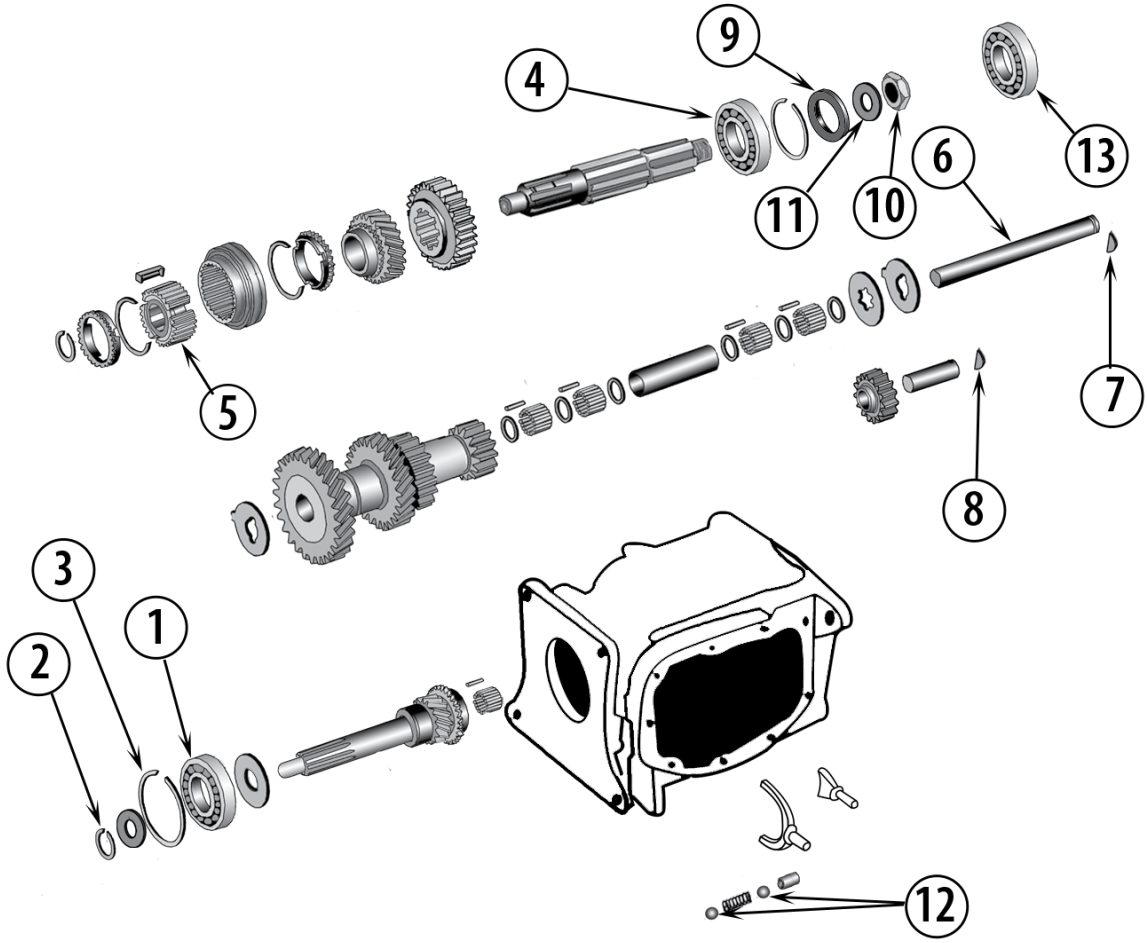

Copyright © 2014 Crown Automotive Sales Co., Inc. All rights reserved.

Model T85

Item #	Description	Comment	Replaces Part #
1	Input Bearing	Front	J0917068
2	Snap Ring, Input Bearing	Small; .089"Thick Small; .098"Thick	J0932107 932111
3	Snap Ring, Input Bearing	Large	640782
4	Bearing, Main Shaft	Rear	J8136619
5	Hub, Synchronizer	2nd & 3rd	J0943466
6	Countershaft		J0932418*
7	Key, Countershaft		G103905
8	Key, Reverse Idler Shaft		G103905
9	Bushing, Main Shaft	Rear; 2WD	J8128880
10	Nut, Main Shaft	Nylock; 4WD	J8126806
11	Washer, Main Shaft	4WD	JA001410
12	Ball, Shift Rail	2 Required	453593
13	Bearing, Overdrive	Rear; 2WD	J8136622

Copyright © 2014 Crown Automotive Sales Co., Inc. All rights reserved.

Model T86

Borg-Warner 3-Speed Transmission

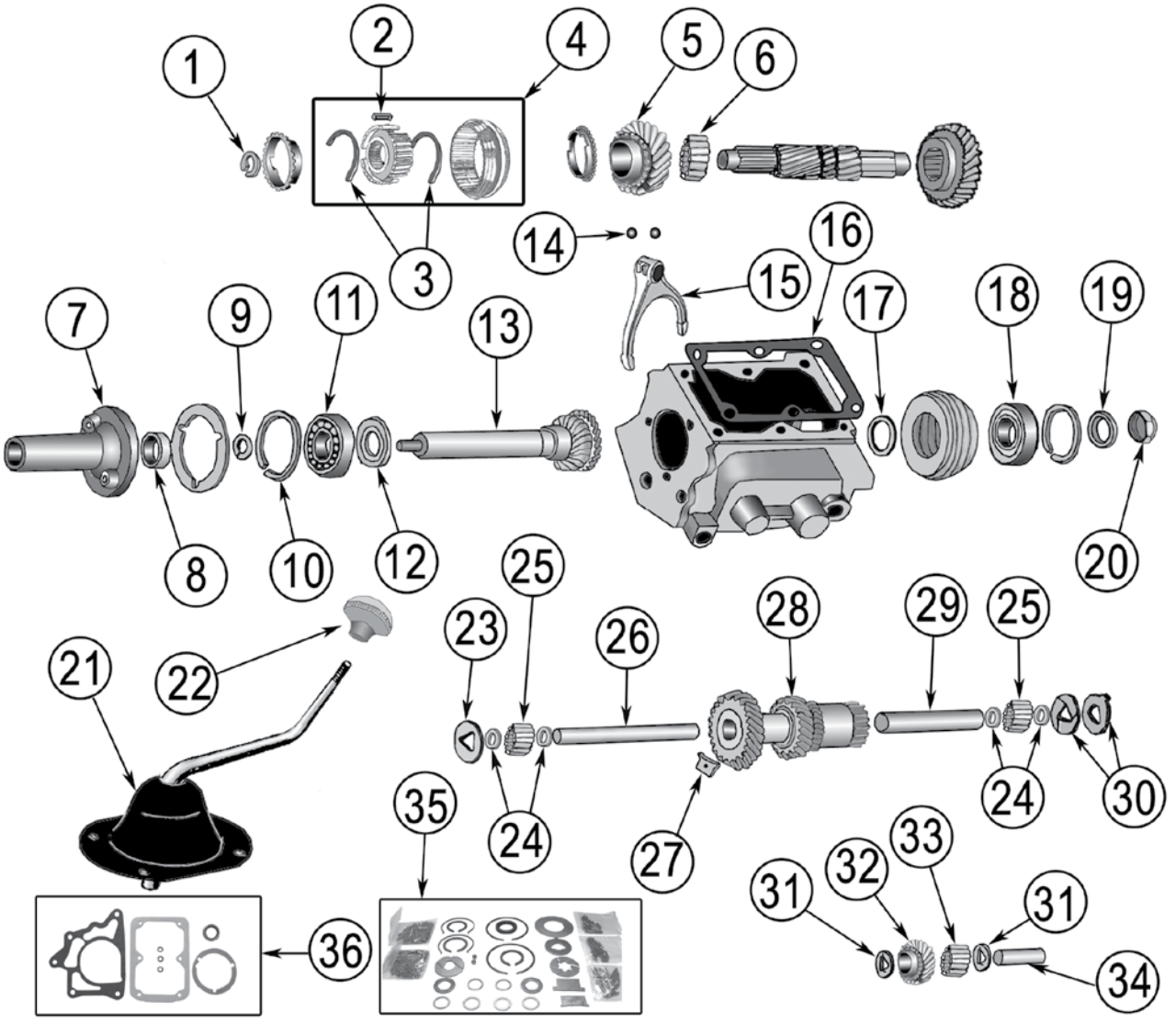

Item #	Description	Model	Comments	Replaces Part #
1	Snap Ring, 2nd and 3rd Gear Synchronizer	All All	.089"Thick .098"Thick	J0932107 932111
2	Plate, Synchronizer	All	2nd and 3rd Gear; 3 Required	J0640395
3	Spring, Synchronizer	All	2nd and 3rd Gear; 2 Required	J0939293
4	Synchronizer Assembly, 2nd and 3rd Gear	All	All except C101 w/ 4-134 F-Head; w/o Blocking Rings	J0941655
5	Gear, 2nd	All	All except C101 w/ 4-134 F-Head	J0941656
6	Roller Bearing, Mainshaft Pilot	All	21 Required	J3208152
7	Retainer, Front Bearing	C101 All	w/ 4-134 F-Head Engine Except C101 w/ 4-134 F-Head Engine	J0640422 J0941665
8	Seal, Input	All C101	Except C101 w/ 4-134 F-Head Engine w/ 4-134 F-Head Engine (Felt Seal)	83300041 J0645980

Copyright © 2014 Crown Automotive Sales Co., Inc. All rights reserved.

Model T86

Item #	Description	Model	Comments	Replaces Part #
9	Snap Ring, Front Bearing Retainer	All All All	.086" Thick .089" Thick .092" Thick	640783 640784 640785
10	Snap Ring, Input Shaft Bearing	All		640782
11	Bearing, Input Shaft	All		J0640781
12	Washer, Front Bearing Retainer	CJ-5, 6, C101		J0640893
13	Gear, Input	CJ-5, 6, C101 SJ, J-Series	w/ V6-225 Engine; 11-3/4" Long; S33-L18 Teeth 10 23/32" Long; S33-L18 Teeth	J0941666 * J0941667
14	Ball, Poppet	All All	5/16" Diameter 3/8" Diameter	453593 J0639104
15	Fork, Shift, 1st & Reverse	CJ-5, 6 C101	 w/ Tag # AS1-T86-CC, AS19-T86-AA	J0642767 J0642767
16	Gasket, Shift Cover	All	w/ Top Shift	J0642770
17	Spacer, Mainshaft Bearing	All		J8128880
18	Bearing, Mainshaft	All All	Rear; w/o Snap Ring Groove Rear; w/ Snap Ring Groove	J8136619 J3184013
19	Washer, Mainshaft Nut	All		JA001410
20	Nut, Mainshaft	All		J8126806
21	Boot, Shift	All		J0907107
22	Knob, Shift	All		J0929393
23	Washer, Countershaft Thrust	All	Front	J0941662
24	Washer, Countershaft Needle Bearing	All	4 Required	J3112993
25	Roller Bearing, Countershaft	All	88 Required	J8132403
26	Countershaft	All		J0640412
27	Plate, Reverse Idler Shaft & Countershaft Lock	All		J0937458
28	Gear, Cluster	All	R33-25-19-L14 Teeth	J0944769
29	Spacer, Countershaft Needle Bearing	SJ, J-Series		J0802414
30	Washer, Countershaft Thrust	All All	Rear; Steel w/o Lip Rear; Bronze Backed w/o Lip	J0640411 J0941061
31	Washer, Reverse Idler Gear Roller Bearing	CJ-5, 6, C101		J0944334
32	Gear, Reverse Idler	CJ-5, 6, C101		944332
33	Roller Bearing, Reverse Idler	CJ-5, 6, C101	22 Required	J0944333
34	Shaft, Reverse Idler Gear	All		J0944335 *
Crown Kits				
35	Small Parts Kit	All	Includes roller bearings, snap rings, thrust washers, and input seal	T86AA
36	Gasket & Seal Kit	All	Includes input seal, cover gasket, input bearing retainer gasket, transmission to transfer case gasket, and 3 screw seals	J0944817

* Not Currently Available

Copyright © 2014 Crown Automotive Sales Co., Inc. All rights reserved.

Model T90

Borg-Warner 3-Speed Transmission

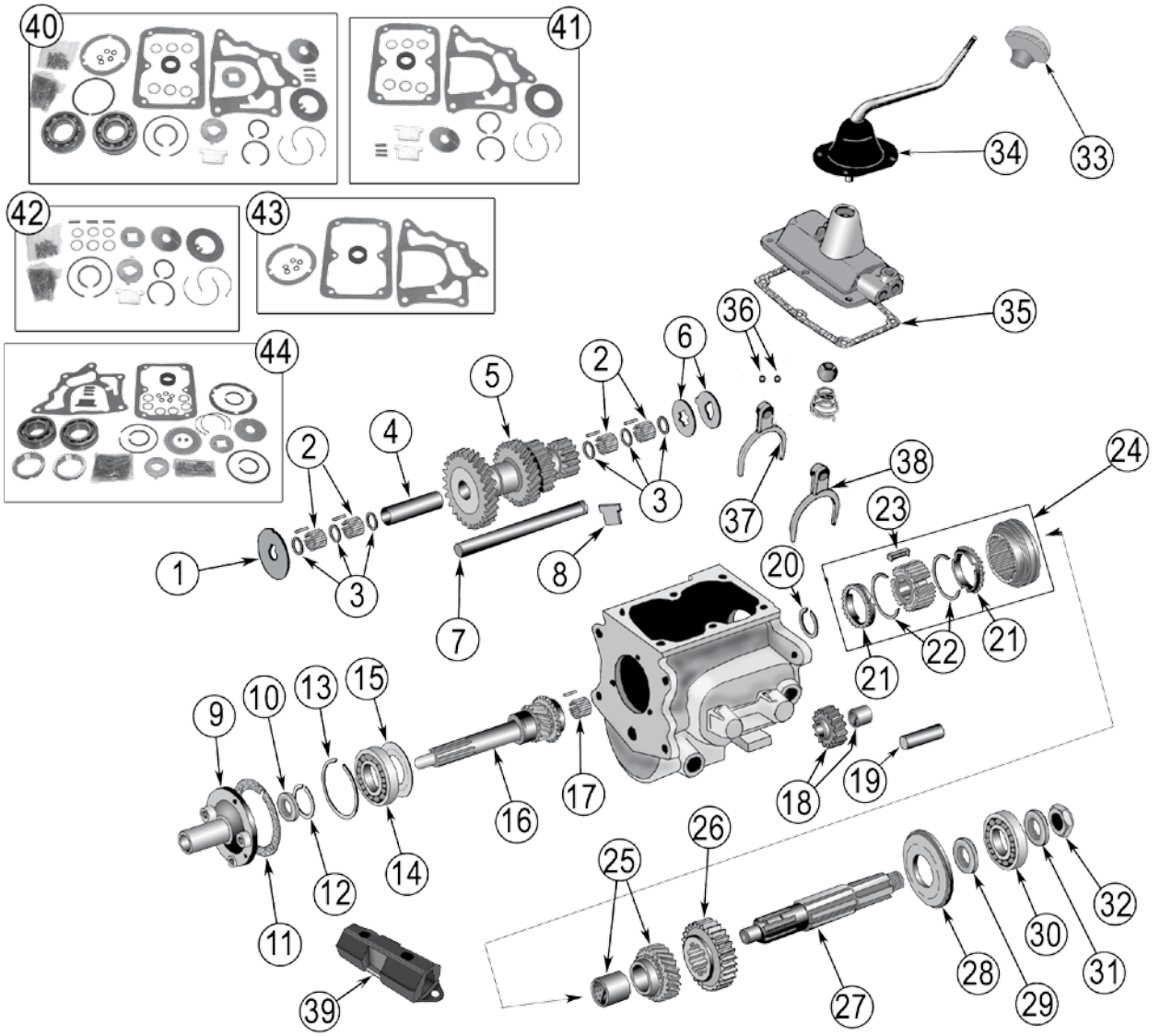

Item #	Description	Comments	Replaces Part #
1	Washer, Countershaft Thrust	Front	J0640409
2	Roller Bearing, Countershaft	88 Required	J8132403
3	Washer, Countershaft Roller Bearing	4 Required	J3112993
4	Spacer, Countershaft Roller Bearing		J0802414
5	Gear, Cluster	L33-26-S19-14 Teeth	J0906200
6	Washer, Countershaft Thrust	Rear; .0625" Thick; Steel w/ Lip Rear; Bronze Backed, w/o Lip Rear; Bronze Backed, w/ Lip	J0640411 J0941061 640410
7	Countershaft		J0640412
8	Plate, Reverse Idler Shaft & Countershaft Lock	All except SJ, J-Series	J0937854
9	Retainer, Front Bearing	Sedan Delivery, Station Wagon, Pickup, SJ, J-Series	J0906201
10	Gasket, Front Bearing Retainer		J0640426

Copyright © 2014 Crown Automotive Sales Co., Inc. All rights reserved.

Model T90

11	Seal, Front Bearing	Felt	J0645980
Item #	Description	Comments	Replaces Part #
12	Snap Ring, Front Bearing Retainer, Outer	.086" Thick .089" Thick .092" Thick	640783 640784 640785
13	Snap Ring, Front Bearing Retainer, Inner		640782
14	Bearing, Input Shaft		J8136643
15	Washer, Front Bearing Retainer		J0640893
16	Gear, Input	9-1/16" Long; S30-R18 Teeth; CJ-2A, 3A, 3B, 5, 6, C101, Sedan Delivery, Station Wagon, Pickup 9-1/8" Long; S30-R16 Teeth; CJ-2A, 3A, 3B, 5, 6, C101, Sedan Delivery, Station Wagon 11-1/2" Long; S30-R18 Teeth; FC-170, Pickup, SJ, J-Series	J0640428 J0936448 J0906203
17	Roller Bearing, Input shaft	14 Required	J0640786
18	Gear, Reverse	Includes Bushing	640417
19	Shaft, Reverse Gear		J0640420
20	Snap Ring, 2nd & 3rd Gear Synchronizer	.086" Thick .098" Thick	J0932107 932111
21	Blocking Ring, Synchronizer	2nd and 3rd Gear; All except SJ, J-Series	J0640397
22	Spring, Synchronizer	2nd and 3rd Gear; 2 Required	J0939293
23	Plate, Synchronizer	2nd and 3rd Gear; 3 Required	J0640395
24	Synchronizer Assembly, 2nd & 3rd Gear	Includes Blocking Rings; All except SJ, J-Series	J0640391
25	Gear, 2nd	Includes Bushing	J0906197
26	Gear, 1st & Reverse		J0906199
27	Mainshaft		J0640390
28	Adapter, Transmission Rear Bearing		644552
29	Spacer, Mainshaft Bearing		J8128880
30	Bearing, Mainshaft	Rear	J8136619
31	Washer, Mainshaft		JA001410
32	Nut, Mainshaft	Nylock	J8126806
33	Knob, Shift	Thread On Push On	J0929393 J0931356
34	Boot, Shift		J0907107
36	Ball, Poppet	3/8" Diameter 5/16" Diameter	J0639104 453593
37	Fork, Shift, 2nd and 3rd	w/ Column Shift w/ Floor Shift	J0640374 642766 *
38	Fork, Shift, 1st and Reverse	w/ Column Shift w/ Floor Shift	J0640378 * J0642767
39	Mount, Transmission		J8126799
Crown Kits			
40	Transmission Installation Kit	Includes bearings, seals, gaskets, and small parts kit	T90BSG
41	Overhaul Kit	Includes synchronizer plates, snap rings, thrust washers, input seal, and transmission to transfer case gasket	J0805693
42	Small Parts Kit	Includes roller bearings, snap rings, thrust washers, and poppet balls	J0922607
43	Gasket Set	Includes front bearing retainer gasket, cover gasket, transmission to transfer case gasket, and 3 washer gaskets	J0923301
44	Master Overhaul Kit	Includes bearings, seals, gaskets, blocking rings, and small parts	T90MASKIT

* Not Currently Available

Copyright © 2014 Crown Automotive Sales Co., Inc. All rights reserved.

Model T98

Borg-Warner 4-Speed Transmission

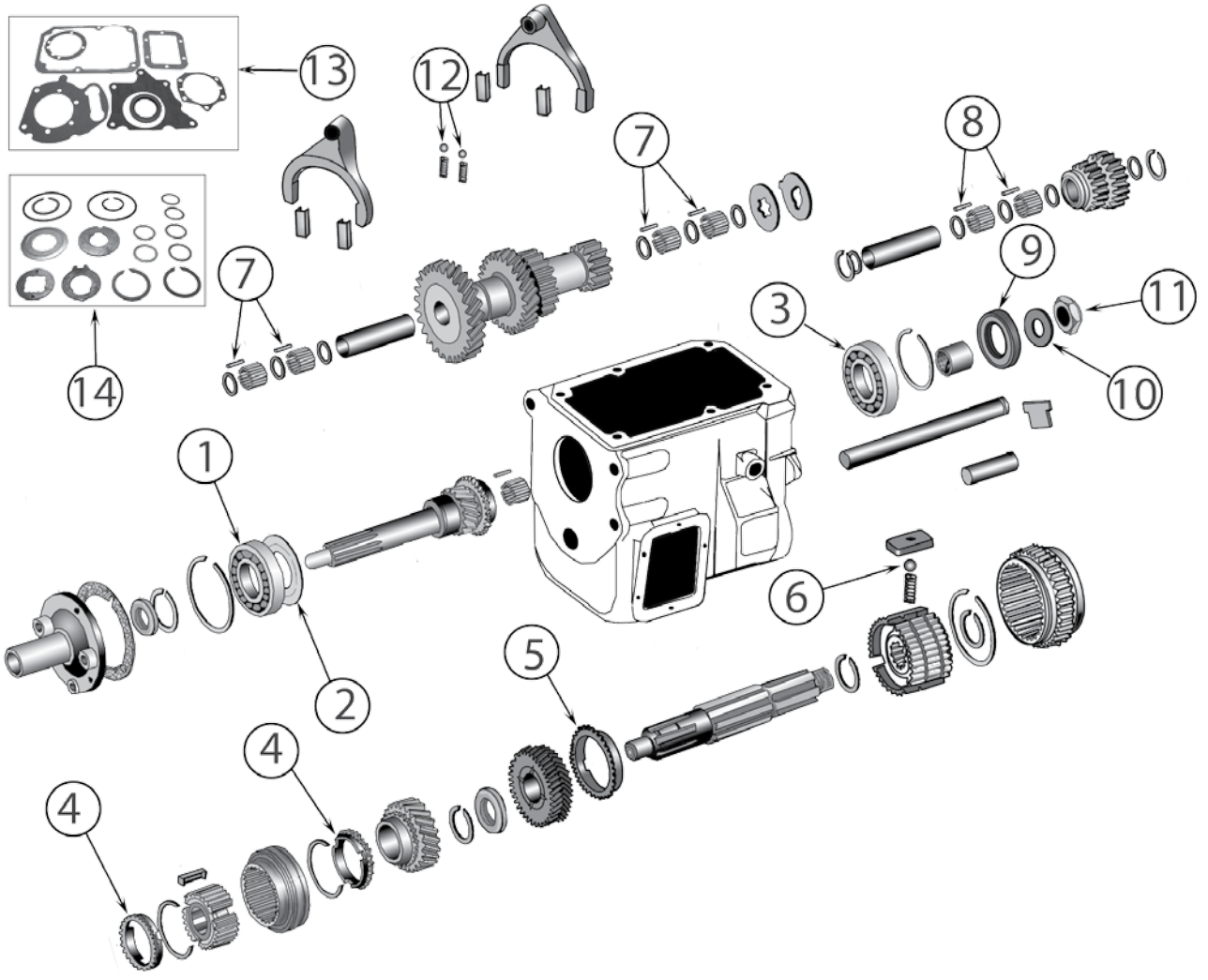

Copyright © 2014 Crown Automotive Sales Co., Inc. All rights reserved.

Model T98

Item #	Description	Comment	Replaces Part #
1	Bearing, Input Shaft		J4488141
2	Washer, Front Bearing Retainer		J0640893
3	Bearing, Main Shaft	Rear	J8136623
4	Blocking Ring, Synchonrizer	3rd & 4th; 2 Required	J0912324
5	Blocking Ring, Synchonrizer	1st & 2nd	J0912340
6	Ball, Synchronizer	1st & 2nd; 3 Required	453593
7	Roller Bearing, Countershaft	88 Required	J0912345
8	Roller Bearing, Reverse Idler Shaft	77 Required	J0912354
9	Output Seal		J0939335
10	Washer, Main Shaft		JA001410
11	Nut, Main Shaft	Slotted Nylock	JA000520 J8126806
12	Ball, Shift Rail	2 Required	453593
13	Gasket Set		J0923302

Copyright © 2014 Crown Automotive Sales Co., Inc. All rights reserved.

Model T4

Borg-Warner 4-Speed Transmission

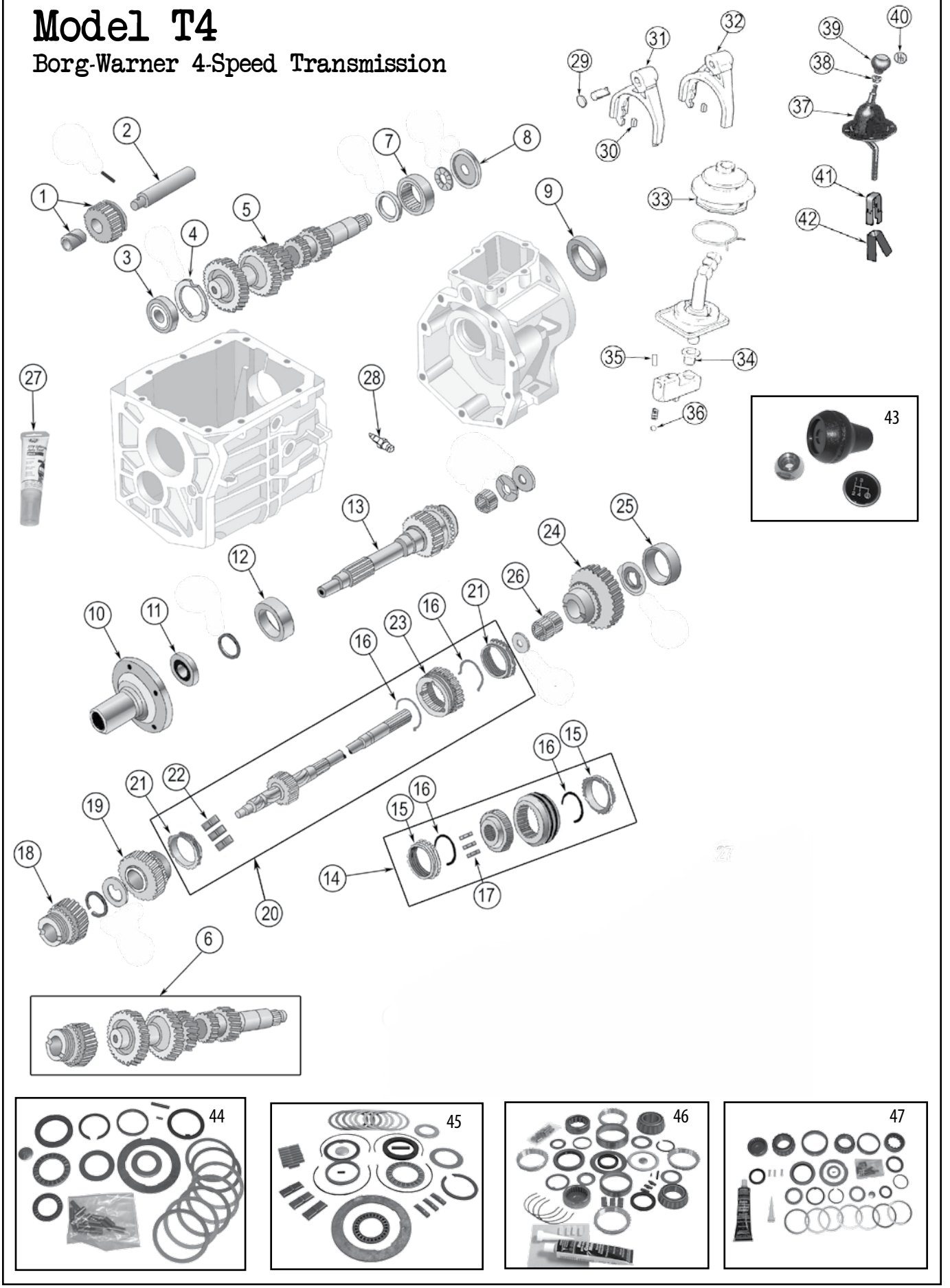

Copyright © 2014 Crown Automotive Sales Co., Inc. All rights reserved.

Model T4

Item #	Description	Comments	Replaces Part #
1	Gear, Reverse Idler		J8134038
2	Shaft, Reverse Idler		J8134039 *
3	Bearing, Cluster Gear	Front	J8134033
4	Thrust Washer, Cluster Gear	Front	J8134032
5	Cluster Gear	37-34-23-15-14 Teeth 37-32-23-15-14 Teeth	J8134031 83500970
6	Cluster Gear Kit	Incl. 27T 3rd Gear & Cluster Gear	83500970K
7	Bearing, Cluster Gear	Rear	J8134036
8	Race, Thrust, Cluster Gear		J8134037
9	Seal, Output		J8132672
10	Retainer, Bearing	Front	J8134013
11	Seal, Input		J8132779
12	Bearing, Input Shaft	Front	J8134015
13	Shaft, Input	10 Splines 14 Splines	83500975 83500968
14	Synchronizer Assembly	3rd & 4th	83510192
15	Blocking Ring Set	3rd & 4th; Includes 2 Rings	J8134058
16	Spring, Synchronizer	2 Required	J8134021
17	Plate, Synchronizer	3rd & 4th; Late Style[1], 3 Required 3rd & 4th; Early Style[1], 3 Required	83510193 J8127418
18	Gear, 3rd	29 Teeth 27 Teeth	83500285 83500380
19	Gear, 2nd		J8134024
20	Main Shaft Assembly	w/o Needle Roller 1st Gear w/ Needle Roller 1st Gear	83501166 83500963 *
21	Blocking Ring Set	1st & 2nd; Includes 2 Rings	J8127403
22	Plate, Synchronizer	2nd Gear; 3 Required	J8127401
23	Slider	1st & Reverse	1351070002
24	Gear, 1st	Used w/o Needle Rollers Used w/ Needle Rollers	83501103 * 83500965 *
25	Bearing, Output Shaft		J8134030
26	Needle Bearing, 1st Gear	84/86	83500969
27	RTV Silicone Sealant		J8993317
28	Switch, Back Up Lamp		J8134068
29	Plug, Shift Rail		J8127473
30	Insert, Shift Fork		J8133418
31	Fork, Shift	3rd & 4th	J8134048
32	Fork, Shift	1st & 2nd	J8134049 *
33	Boot, Shifter		J8134064
34	Sleeve, Shifter		83502930
35	Pin, Shift Lever		J8134040
36	Ball, Crome		453593
37	Boot, Shifter		J5752010
38	Nut, Shift Control		J4006495
39	Knob, Shift		J3241062
40	Insert, Shift Knob		J3241067
41	Clip, Shift Lever		J3241239
42	Isolator, Shift Lever		J3241481
CROWN KITS			
43	Shift Knob Kit		3241067K
44	Small Parts Kit		T450
45	Master Small Parts Kit (Includes #26)		T450MK
46	Master Overhaul Kit		T4MASKIT
47	Master Bearing Kit		BKT4M

[1] Early Style Synchronizer Plates do not have wings
Late Style Synchronizer Plates have 2 wings per plate

* Not Currently Available

Copyright © 2014 Crown Automotive Sales Co., Inc. All rights reserved.

Model T5

Borg-Warner 5-Speed Transmission

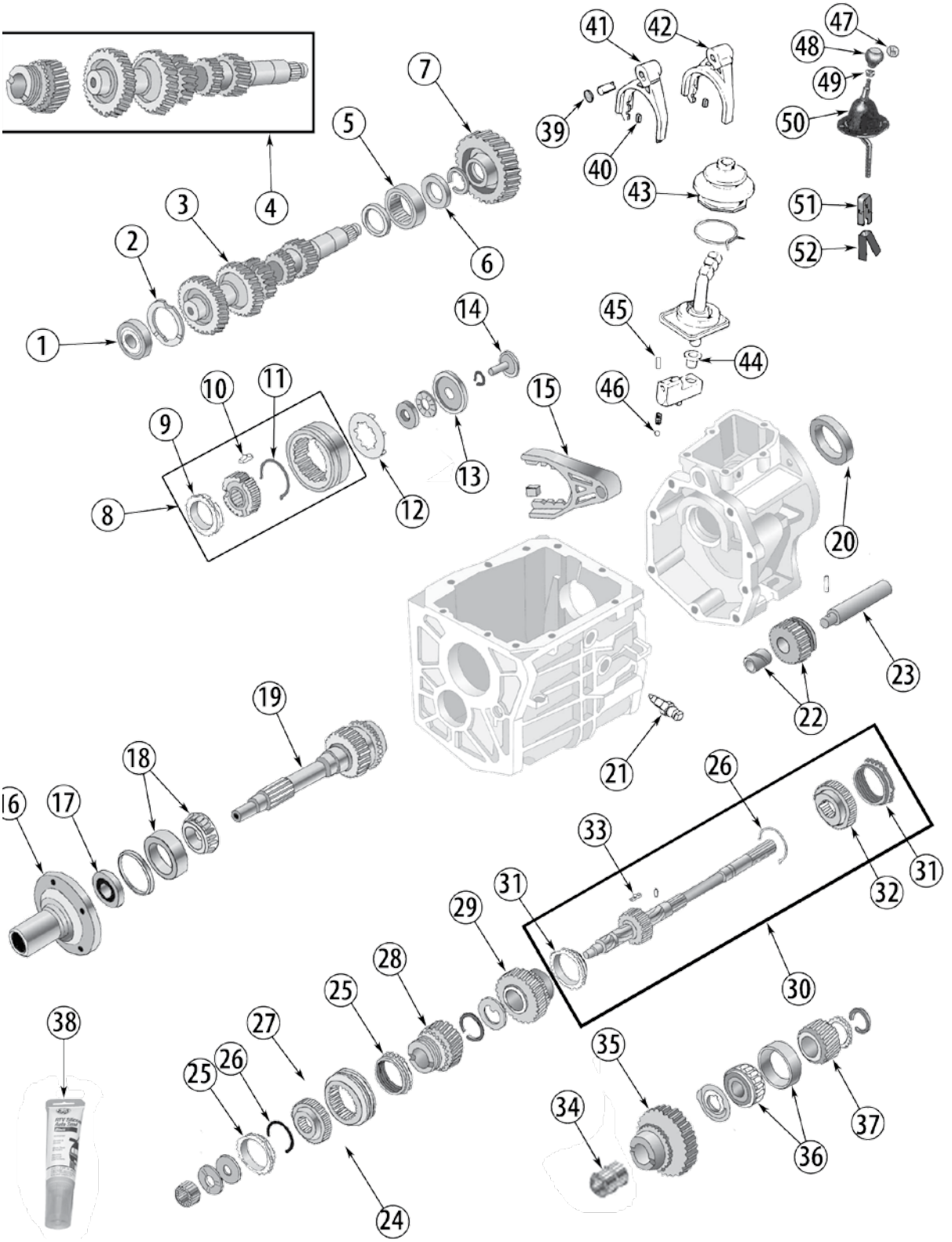

** Can Be Used to Replace Early 34 Tooth Cluster Gear

* Not Currently Available

Copyright © 2014 Crown Automotive Sales Co., Inc. All rights reserved.

Model T5

Item #	Description	Comments	Replaces Part #
1	Bearing, Cluster	Front	J8134071
2	Thrust Washer, Cluster Gear	Front	J8134070
3	Cluster Gear	37-32-23-15-14-26 Teeth 37-34-23-15-14-26 Teeth	83500967 J8134069
4	Cluster Gear Kit	Includes 27T 3rd Gear & Cluster Gear	83500967K **
5	Bearing, Cluster	Rear	J8134036
6	Spacer, Cluster Gear		J8134072
7	Gear, 5th	53 Teeth 51 Teeth	J8134083 * J8134084 *
8	Synchronizer Assembly	5th Gear	J8134086
9	Blocking Ring Set	5th Gear: Includes 2 Rings	J8127415
10	Plate, Synchronizer	5th Gear; 3 Required	J8127418
11	Spring, Synchronizer	5th Gear; 2 Required	J8127419
12	Retainer, 5th Gear		J8134087
13	Race, Rear Cluster Gear Thrust Washer		J8134037
14	Funnel		J8134090 *
15	Fork, Shift	5th Gear	J8134085 *
16	Retainer, Front Bearing		J8134013
17	Seal, Input		J8132779
18	Bearing & Cup, Input Shaft	Front	J8134015
19	Shaft, Input	10 Splines 14 Splines	83500975 83500968
20	Seal, Output	Insert, Shift Fork	J8132672
21	Switch, Back Up Lamp		J8134068
22	Gear, Reverse Idler		J8134038
23	Shaft, Reverse Idler		J8134039 *
24	Synchronizer Assembly	3rd & 4th	83510192
25	Blocking Ring Set	3rd & 4th; Includes 2 Rings	J8134058
26	Spring, Synchronizer	3rd & 4th; 2 Required	J8134021
27	Plate, Synchronizer	3rd & 4th; Early Style[1], 3 Required 3rd & 4th; Late Style[1], 3 Required	J8127418 83510193
28	Gear, 3rd	29 Teeth 27 Teeth	83500285 83500380
29	Gear, 2nd		J8134024

[1] Early Style Synchronizer Plates do not have wings
Late Style Synchronizer Plates have 2 wings per plate

* Not Currently Available

Continued on Next Page

Copyright © 2014 Crown Automotive Sales Co., Inc. All rights reserved.

Model T5

Borg-Warner 5-Speed Transmission

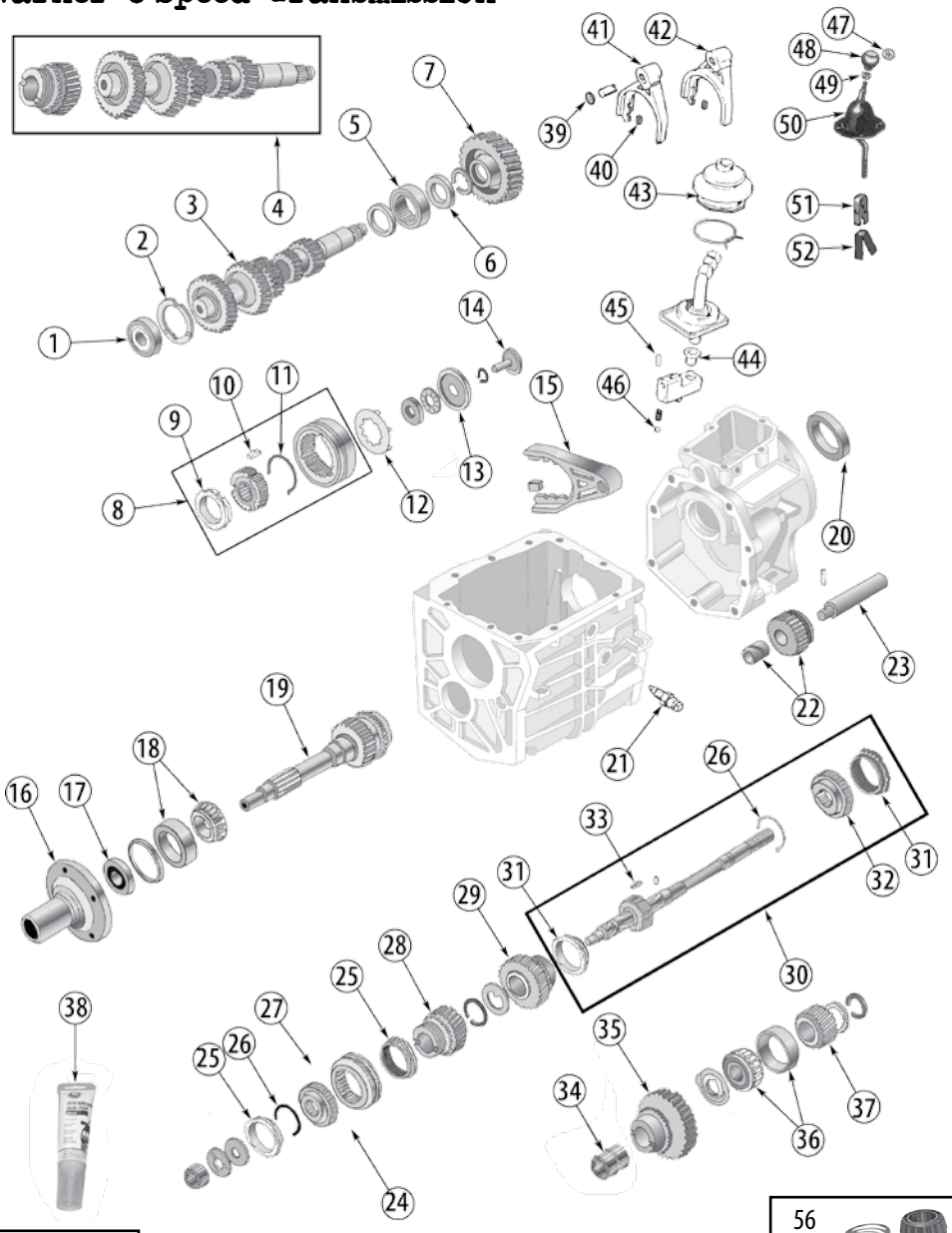

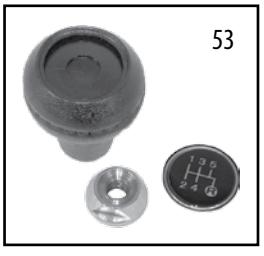

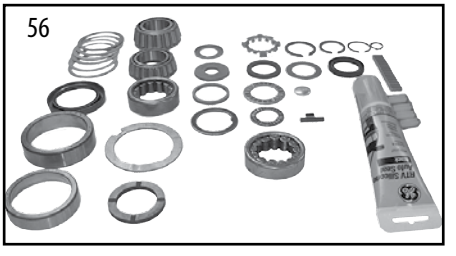

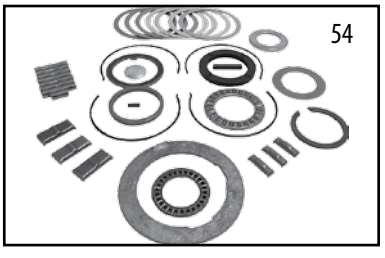

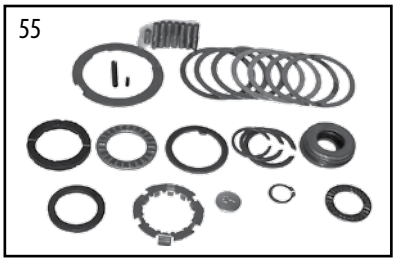

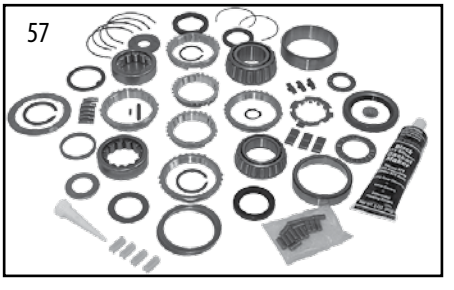

Copyright © 2014 Crown Automotive Sales Co., Inc. All rights reserved.

Model T5

Item #	Description	Comments	Replaces Part #
30	Main Shaft Assembly	w/o Needle Bearing First Gear w/ Needle Bearing First Gear	83501166 83500963 *
31	Slider	1st & Reverse	1351070002
32	Blocking Ring Set	1st & 2nd; Includes 2 Rings	J8127403
33	Plate, Synchronizer	2nd Gear; 3 Required	J8127401
34	Needle Bearing, 1st Gear	84/86	83500969
35	Gear, 1st	w/o Needle Bearings w/ Needle Bearings	83501103 * 83500965 *
36	Bearing & Cup, Output Shaft		J8134030
37	Gear, 5th	23 Teeth 25 Teeth	J8134080 * J8134081 *
38	RTV Silicone Sealant		J8993317
39	Plug, Shift Rail		J8127473
40	Insert, Shift Fork		J8133418
41	Fork, Shift	3rd & 4th	J8134048
42	Fork, Shift	1st & 2nd	J8134049 *
43	Boot, Shifter		J8134064
44	Sleeve, Shifter		83502930
45	Pin, Shift Lever		J8134040
46	Ball, Crome		453593
47	Boot, Shifter		J5752010
48	Nut, Shift Control		J4006495
49	Knob, Shift		J3241062
50	Insert, Shift Knob		J3241073
51	Clip, Shift Lever		J3241239
52	Isolator, Shift Lever		J3241481
Crown Kits			
53	Kit, Shift Knob		3241073K
54	Master Small Parts Kit (Includes #34)		T550MK
55	Small Parts Kit		T550
56	Master Bearing Kit		BKT5M
57	Master Overhaul Kit		T5MASKIT

Copyright © 2014 Crown Automotive Sales Co., Inc. All rights reserved.

Model SR4

Borg-Warner 4-Speed Transmission

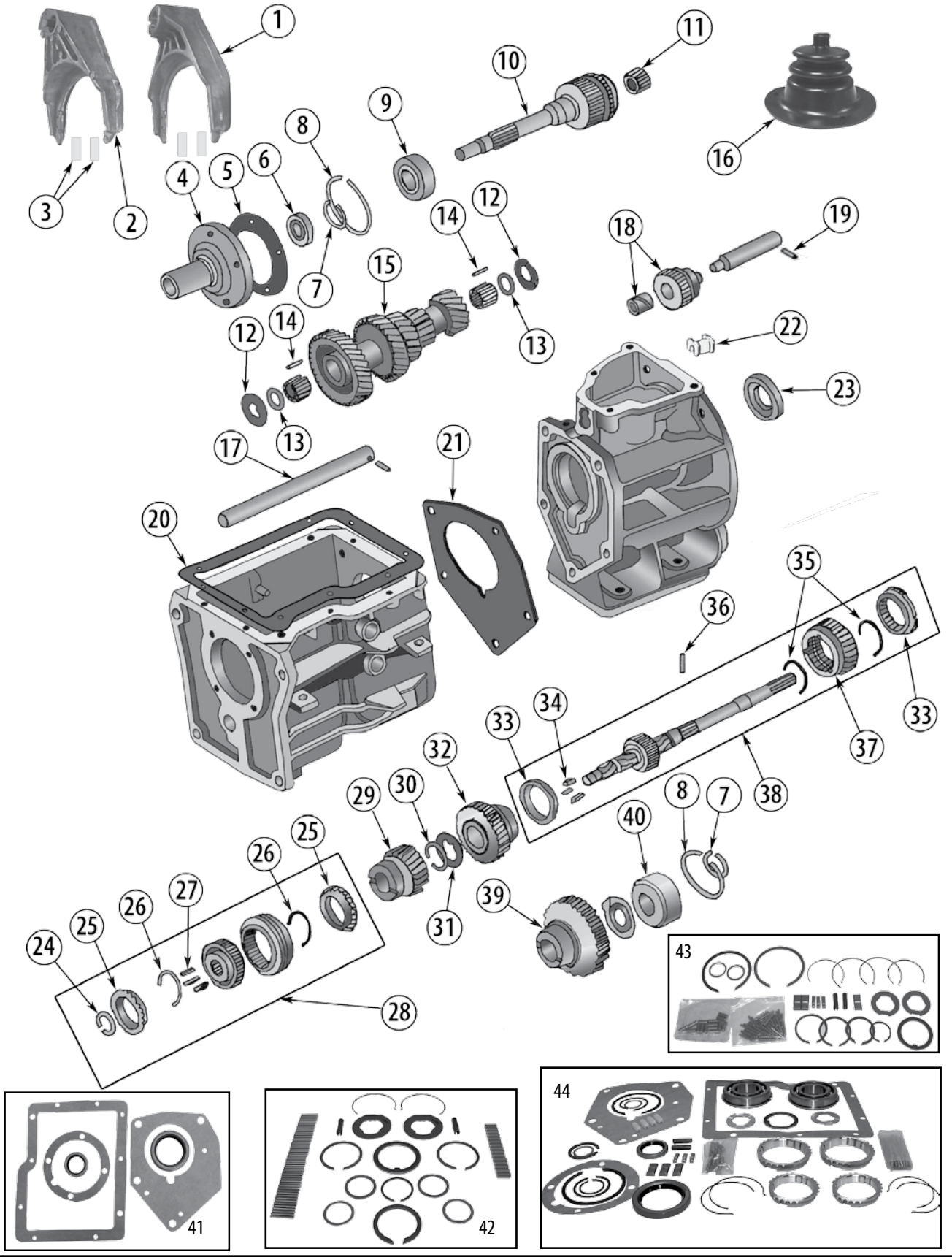

Copyright © 2014 Crown Automotive Sales Co., Inc. All rights reserved.

Model SR4

Item#	Description	Comments	Replaces Part #
1	Fork, 1st & 2nd Gear Shift		J8127483
2	Fork, 3rd & 4th Gear Shift		J8127481
3	Insert, Shift Fork		J8133418
4	Retainer, Front Bearing		J8127389 *
5	Gasket, Bearing Retainer		J8127392
6	Seal, Input		83300041
7	Snap Ring, Synchronizer Hub	3rd & 4th	J8124930
8	Snap Ring, Input & Output Bearing	Front or Rear	J8127395
9	Bearing, Input Shaft		83300000
10	Shaft, Input	20 Teeth 22 Teeth	J8132596 J8132597
11	Roller Bearing, Input Shaft		J8127397
12	Thrust Washer, Cluster Gear	Front or Rear	J8127432
13	Washer, Cluster Gear	Front or Rear	J8127429
14	Roller, Cluster Gear	50 Required	J8127430
15	Cluster Gear	37-31-24-15-15 Teeth 35-29-23-15-15 Teeth	J8132662 J8127428 *
16	Boot, Shifter		J5752010
17	Countershaft		J8127433
18	Gear, Reverse Idler	Includes Bushing	J8134230
19	Roll Pin, Reverse Idler Shaft	1/4" x 1"	J8127434
20	Gasket, Shift Cover		J8127477
21	Gasket, Transmission to Adapter		J8127385
22	Bushing, Shifter		J8127490
23	Seal, Output		J8132672
24	Snap Ring, Synchronizer Hub	3rd & 4th	J8127420
25	Blocking Ring Set	3rd & 4th, Includes 2 Rings	J8127415
26	Spring, Synchronizer	3rd & 4th, 2 Required	J8127419
27	Plate, Synchronizer	3rd & 4th, 3 Required	J8127418
28	Synchronizer Assembly	3rd & 4th	J8127416
29	Gear, 3rd	25 Teeth 26 Teeth	J8132674 J8127421
30	Snap Ring, Main Shaft	Between 2nd & 3rd Gear	J8127424
31	Thrust Washer, Main Shaft	Between 2nd & 3rd Gear	J8134025
32	Gear, 2nd	31 Teeth 32 Teeth	J8132675 J8127422
33	Blocking Ring Set	1st & 2nd , Includes 2 Rings	J8127403
34	Plate, Synchronizer	1st & 2nd , 3 Required	J8127401
35	Spring, Synchronizer	1st & 2nd , 2 Required	J8127400
36	Roll Pin, Main Shaft		J8127427
37	Slider, 1st & Reverse Gear		J8127406
38	Main Shaft Assembly		J8133855
39	Gear, 1st		J8127425
40	Bearing, Output Shaft		J8136622
CROWN KITS			
41	Gasket and Seal Kit	Includes Item #s 5, 6, 20, 21 & 23	SR4-GS
42	Small Parts Kit	Includes Item #s 7, 8, 11, 12, 13, 14, 19, 24, 26, 30 & 31	SR4-50
43	Small Parts Master Kit	Includes Item #s 27, 34, 35 & 42	SR4-50-MK
44	Master Overhaul Kit	Includes Item #s 3, 9, 25, 33, 40, 41 & 43	SR4-MASKIT

* Not Currently Available

Copyright © 2014 Crown Automotive Sales Co., Inc. All rights reserved.

Model T150

Tremec 3-Speed Transmission

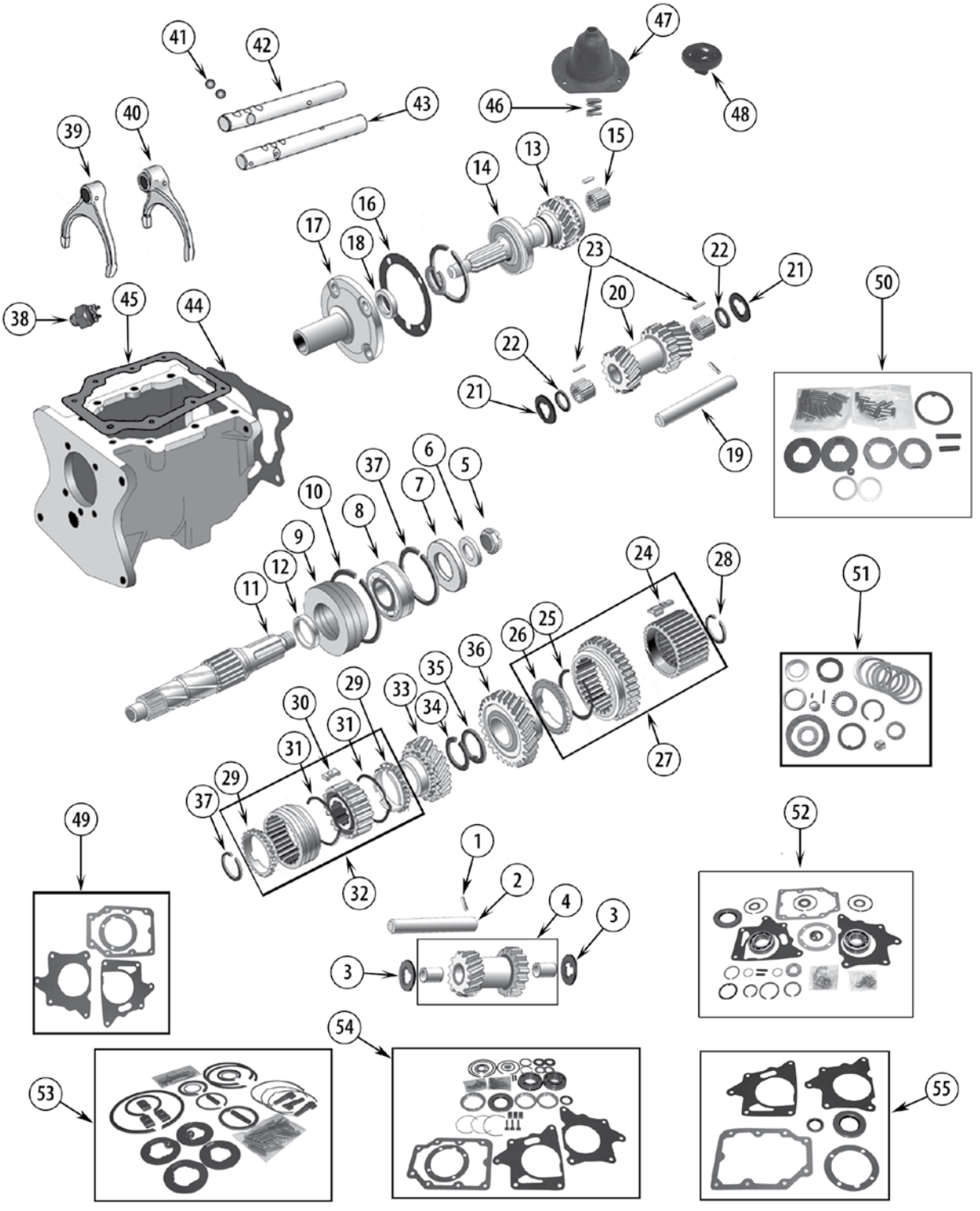

Copyright © 2014 Crown Automotive Sales Co., Inc. All rights reserved.

Model T150

Item #	Description	Comments	Replaces Part #
1	Pin, Reverse Idler Gear		J8124932
2	Shaft, Reverse Idler Gear		J8124912
3	Washer, Reverse Idler Gear	Front or Rear	J8124915
4	Gear, Reverse Idler	Includes Bushings	J8124913
5	Nut, Main Shaft		J8126806
6	Washer, Main Shaft		JA001410
7	Seal, Output		J5358980
8	Bearing, Main Shaft	Rear	J8136619
9	Adapter, Rear Bearing		J8129735
10	Snap Ring, Rear Bearing Adapter		J8126811
11	Main Shaft		J8126804
12	Bushing, Main Shaft		J8128880
13	Shaft, Input		J8126106
14	Bearing, Input Shaft		J8136643
15	Roller Bearing, Input Shaft	15 Required	J8127397
16	Gasket, Front Bearing Retainer		J8128453
17	Retainer, Front Bearing		J8124880
18	Seal, Input		83300041
19	Countershaft		J8136675
20	Cluster Gear		J8124907
21	Thrust Washer, Cluster Gear	Front or Rear	J8127432
22	Washer, Countershaft	Front or Rear	J8127429
23	Roller Bering, Cluster Gear	50 Required	J8127430
24	Plate, Synchronizer	1st & Reverse; 3 Required	J8124904
25	Spring, Synchronizer	1st & Reverse	J8124905
26	Blocking Ring	1st & Reverse	83300046
27	Synchronizer Assembly	1st & Reverse	J8126234
28	Snap Ring, Main Shaft	Rear	J8124934
29	Blocking Ring Set	2nd & 3rd; Includes 2 Rings	J8124898
30	Plate, Synchronizer	2nd & 3rd; 3 Required	J8124895

Continued on Next Page

Copyright © 2014 Crown Automotive Sales Co., Inc. All rights reserved.

Model T150 (Continued)

Tremec 3-Speed Transmission

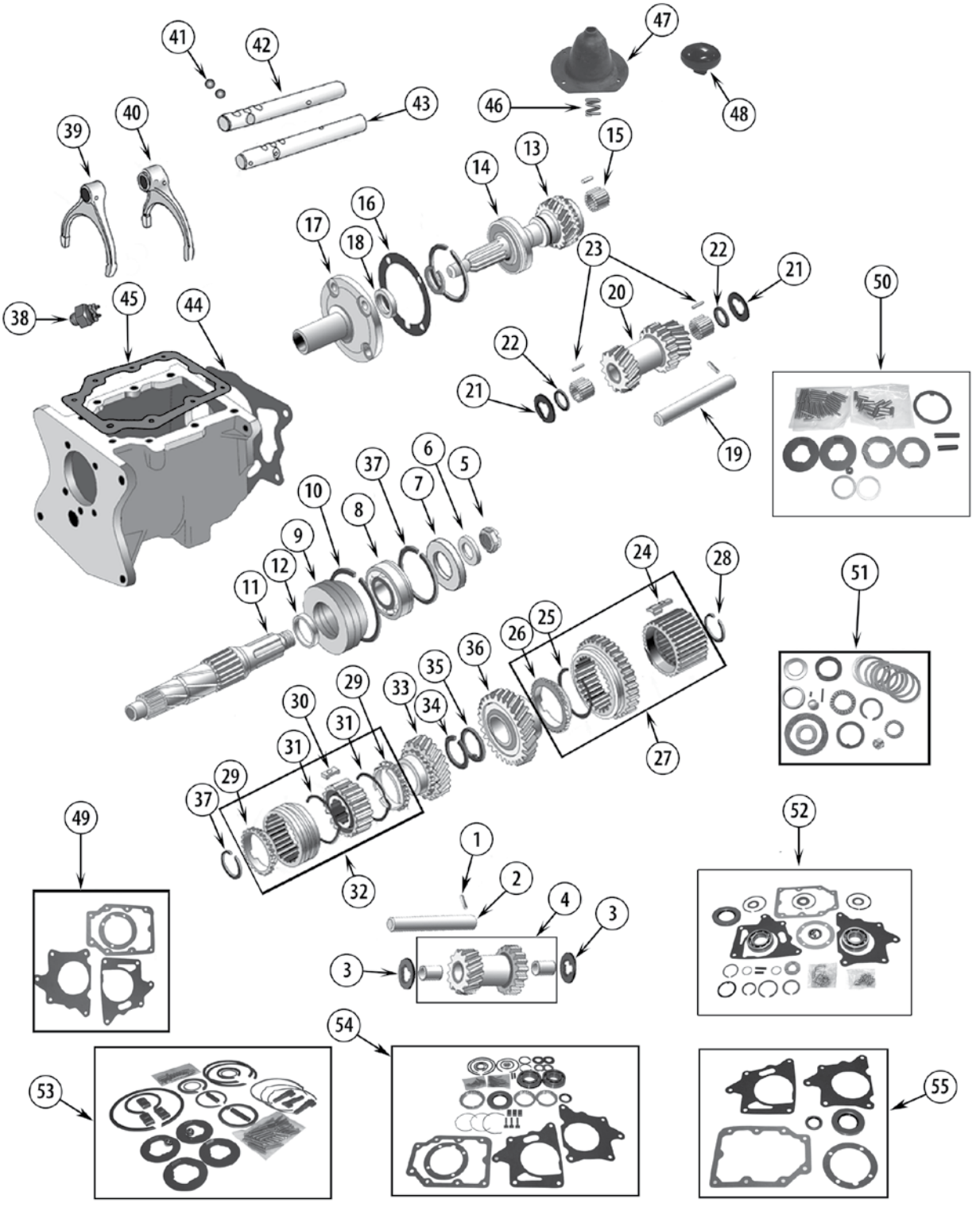

Copyright © 2014 Crown Automotive Sales Co., Inc. All rights reserved.

Model T150 (Continued)

Item #	Description	Comments	Replaces Part #
31	Spring, Synchronizer	2nd & 3rd; 3 Required	J8124896
32	Synchronizer Assembly	2nd & 3rd	J8136631
33	Gear, 2nd	25 Teeth	J8124899
34	Snap Ring, Main Shaft	Between 1st & 2nd Gear	J8124935
35	Thrust Washer, Main Shaft	Between 1st & 2nd Gear	J8124936
36	Gear, 1st	32 Teeth	J8124902
37	Snap Ring, Main Shaft	Front	J8126813
38	Switch, Back-Up Light	Threaded Terminals	J5350061
39	Fork, Gear Shift	2nd & 3rd	J8126826
40	Fork, Gear Shift	1st & Reverse	J8126825
41	Ball, Shift		453593
42	Shift Rail	1st & Reverse	J8126823
43	Shift Rail	2nd & 3rd	J8126824
44	Gasket, Transmission to Transfer Case	w/ Type 1 Transfer Case w/ Type 2 Transfer Case	J0936615 J5359022
45	Gasket, Shift Cover		J8126814
46	Spring, Shift Lever		J8127059
47	Boot, Shifter		J0948185
48	Knob, Shifter		J0929393
CROWN KITS			
49	Gasket Set	Includes Item #s 16, 44 & 45	J8127215
50	Small Parts Kit	Includes Item #s 1, 3, 15, 21, 22, 23, 35 & 41	J8124939
51	Small Parts Kit	Includes Item #s 1, 3, 10, 15, 21, 22, 23, 28, 34, 35, 37 & 41	T150
52	Installation Kit	Includes Item #s 7, 8, 14, 18, 49 & 50	T150-BSG
53	Small Parts Master Kit	Includes Item #s 24, 27, 31, 32 & 51	T150-MK
54	Master Overhaul Kit	Includes Item #s 7, 8, 14, 18, 26, 29, 49 & 53	T150-MASKIT
55	Gasket and Seal Kit	Includes Item #s 7, 8, 16, 18, 44 & 45	T150-GS

Copyright © 2014 Crown Automotive Sales Co., Inc. All rights reserved.

MODELS T176 & T177

Tremec 4-Speed Transmission

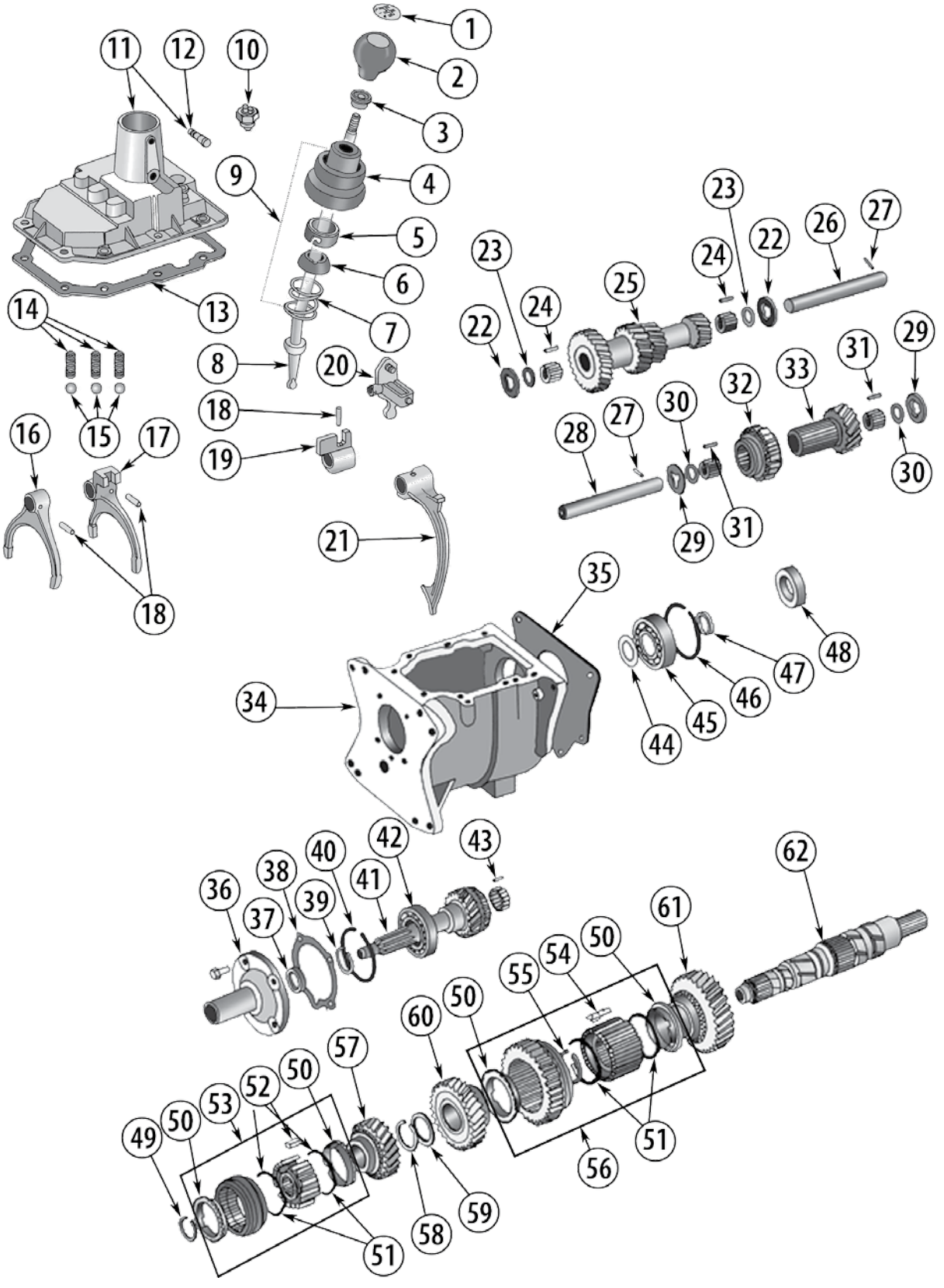

Copyright © 2014 Crown Automotive Sales Co., Inc. All rights reserved.

MODELS T176 & T177

Item #	Description	Model	Comments	Replaces Part #
1	Insert, Shift Knob	T176, T177		J3241067
2	Knob, Shift	T176, T177		J3241062
3	Nut, Shift Control	T176, T177		J4006495
4	Boot, Shift Lever	T176, T177		J8132422
5	Cap, Shift Housing	T176, T177		J8134667
6	Retainer, Shift Housing Spring	T176, T177		J8132420
7	Lever, Shift	T176, T177	CJ-5,7,8 (LHD)	J5359835
8	Spring, Shift Lever	T176, T177		J8127059
9	Shift Lever Repair Kit	T176, T177	Includes # 4, 5, 6, 8	SLR-176K
10	Switch, Back Up Lamp	T176, T177		J5751207
11	Cover, Shift	T176, T177	Includes 2 of #12	J8134292
12	Pin, Shift Lever	T176, T177	2 Required	J8132407
13	Gasket, Shift Cover	T176, T177		J8132428
14	Spring, Shift Interlock	T176, T177	3 Required	J8126828
15	Ball, Shift Interlock	T176, T177	3 Required	453593
16	Shift Fork	T176, T177	3rd & 4th	J8132412
17	Shift Fork	T176, T177	1st & 2nd	J8134429
18	Pin, Shift Fork Retaining	T176, T177		J8134040
19	Lug, Shift Fork	T176, T177	3rd & 4th	J8133794
20	Arm Assembly, Reverse Rocker	T176, T177		J8132815
21	Shift Fork	T176, T177	Reverse	J8132413
22	Thrust Washer, Cluster Gear	T176, T177	Front or Rear	J8132396
23	Washer, Cluster Gear	T176, T177	Front or Rear	J8132395
24	Roller Bearing, Cluster Gear	T176, T177	42 Required	J8132394
25	Cluster Gear	T176 T177	33-26-24-15 Teeth 34-27-25-15 Teeth	J8132391 J8132393
26	Countershaft	T176, T177		J8132397
27	Roll Pin, Countershaft	T176, T177	1/4" x 1"	J8127434
28	Shaft, Reverse Idler	T176, T177		J8132398
29	Thrust Washer, Reverse Idler Shaft	T176, T177	Front or Rear	J8132405
30	Washer, Reverse Idler Shaft	T176, T177	Front or Rear	J8132404
31	Roller Bearing, Reverse Idler Gear	T176,T177	60 Required	J8132403
32	Gear, Reverse Sliding	T176, T177		J8132402
33	Gear, Reverse Idler	T176, T177		J8132399
34	Case, Transmission	T176, T177		J8132375
35	Gasket, Transmission to Adapter	T176, T177		J5359411
36	Retainer, Front Bearing	T176, T177	w/ Trans. 5359389, 5359390, 3-3/4" O/A	J8132372
37	Seal, Input	T176, T177		83300041

Continued on Next Page

Copyright © 2014 Crown Automotive Sales Co., Inc. All rights reserved.

MODELS T176 & T177 (Continued)

Tremec 4-Speed Transmission

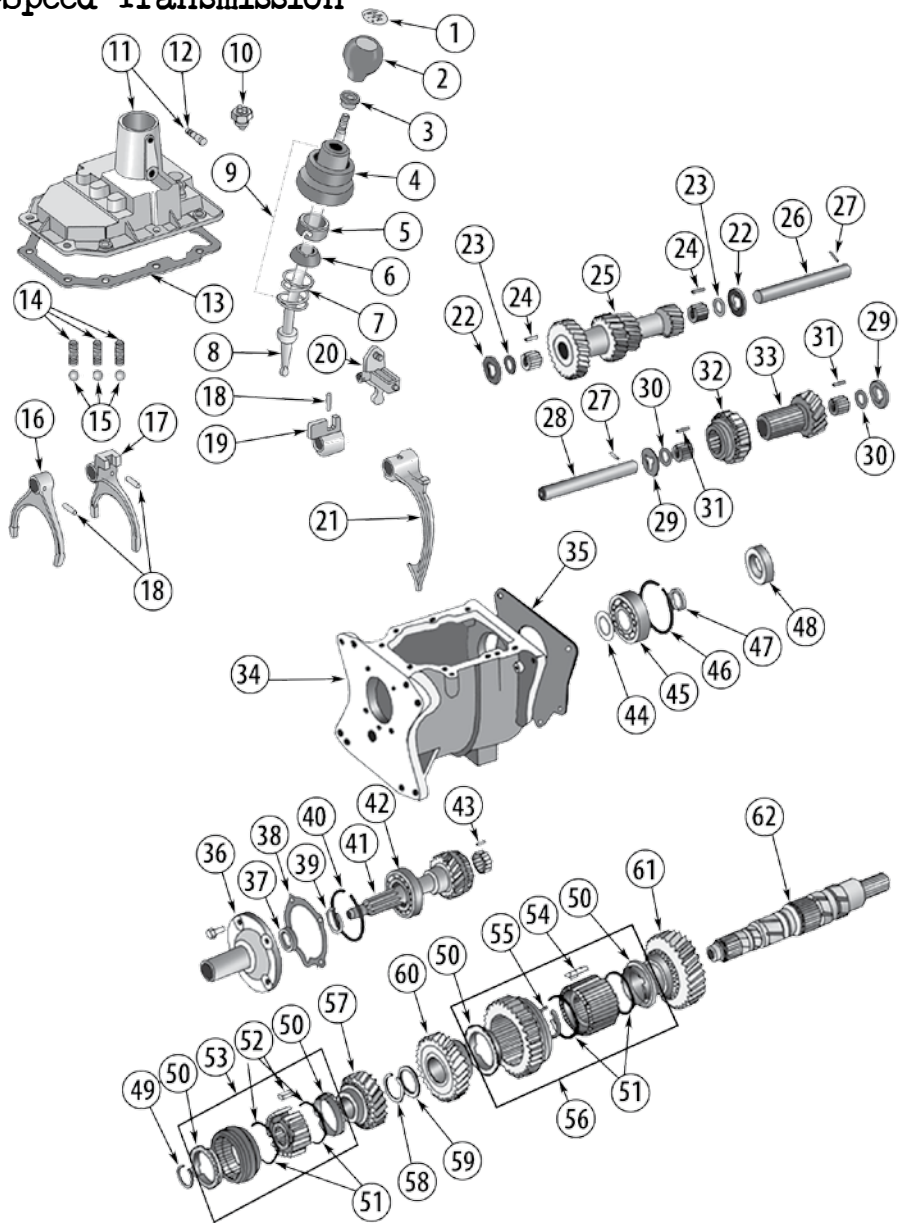

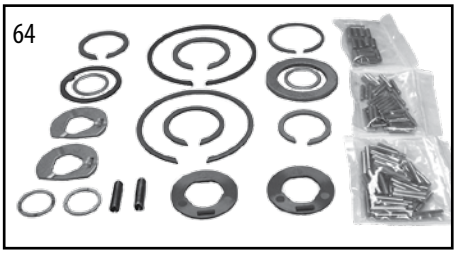

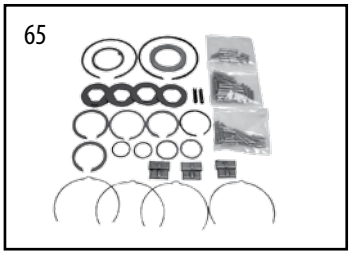

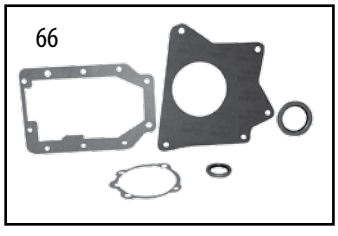

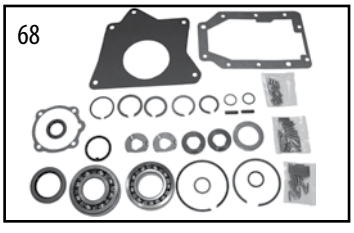

Copyright © 2014 Crown Automotive Sales Co., Inc. All rights reserved.

MODELS T176 & T177 (Continued)

Item #	Description	Model	Comments	Replaces Part #
38	Gasket, Input Bearing Retainer	T176, T177		J8132423
39	Snap Ring, Input Shaft	T176, T177		J8132427
40	Snap Ring, Front Input Bearing	T176, T177		J8132425
41	Shaft, Input	T176 T177	20 Teeth 19 Teeth	J8132369 J8132401
42	Bearing, Input	T176, T177	Front	J8132426
43	Roller Bearing, Input Shaft Bearing	T176, T177		J8127397
44	Thrust Washer, Rear Main Shaft	T176, T177	Rear	J8132390
45	Bearing, Main Shaft	T176, T177	Rear	J8136623
46	Snap Ring, Main Shaft Bearing	T176, T177	Rear	J8132430
47	Snap Ring, Main Shaft			J8124883
48	Seal, Output	T176, T177		J5359457
49	Snap Ring, Synchronizer Hub,		3rd & 4th	J8124930
50	Synchronizer Repair Kit	T176, T177	Includes 1st & 2nd, 3rd & 4th Blocking Rings	J8132378
51	Spring, Synchronizer	T176, T177	1st & 2nd or 3rd & 4th; 2 Required Per Synchronizer	J8132377
52	Plate, Synchronizer	T176, T177	3rd & 4th; 3 Required	J8124895
53	Synchronizer Assembly	T176, T177	3rd & 4th	J8132376
54	Plate, Synchronizer	T176, T177	1st & 2nd; 3 Required	J8132387
55	Snap Ring, Main Shaft	T176, T177	Between 1st & 2nd Gear	J8132388
56	Synchronizer Assembly	T176, T177	1st & 2nd	83504096
57	Gear, 3rd	T176 T177 T176, T177	23 Teeth 22 Teeth 25 Teeth	J8132379 J8132429 J8132380
58	Snap Ring, Main Shaft	T176, T177	Between 2nd & 3rd Gear	J8132385
59	Thrust Washer, Main Shaft	T176, T177	Between 2nd & 3rd Gear	J8124936
60	Gear, 2nd	T176 T177 T176, T177	33 Teeth 32 Teeth 34 Teeth	J8132382 J8132384 J8132383
61	Gear, 1st	T176, T177		J8132389
62	Main Shaft	T176, T177		J8132374
CROWN KITS				
63	Shift Knob Kit	T176, T177	Includes Item #s 1, 2 &3	3241067K
64	Small Parts Kit	T176, T177	Includes Item #s 22, 23, 24, 27, 29, 30, 31, 39, 40, 43, 44, 46, 47, 49, 55, 58 & 59	T17050
65	Small Parts Master Kit	T176, T177	Includes Item #s 51, 52, 54 & 64	T17050MK
66	Gasket & Seal Kit	T176, T177	Includes Item #s 13, 35, 37, 38 & 48	T170GS
67	Master Overhaul Kit	T176, T177	Includes Item #s 42, 48, 50, 51, 52, 54, 64 & 66	BKT170
68	Installation Kit	T176, T177	Includes Item #s 44, 45, 64 & 66	T170BSG

Copyright © 2014 Crown Automotive Sales Co., Inc. All rights reserved.

Models AX4 & AX5

Aisin-Warner 4 & 5-Speed Transmission

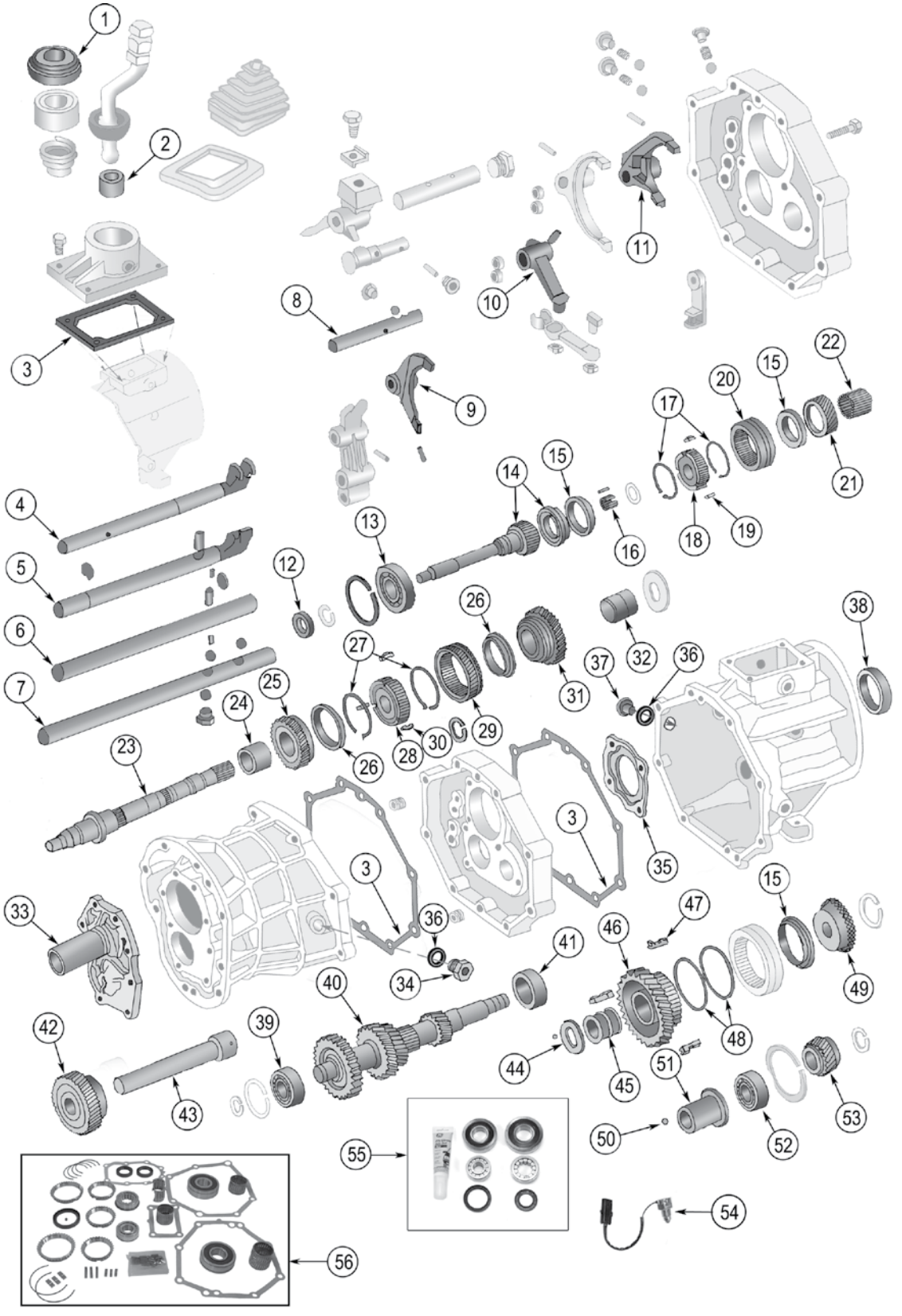

Copyright © 2014 Crown Automotive Sales Co., Inc. All rights reserved.

Models AX4 & AX5

Item #	Description	Comments	Model	Replaces Part#
1	Boot, Gear Shift		AX4, AX5	83500520
2	Bushing, Shift Lever		AX4, AX5	83500519
3	Gasket and Seal Kit	Includes All Gaskets & Front Oil Seal	AX4, AX5	AX-GS
4	Shaft, 3rd & 4th Gear Shift		AX4 AX5	83506048 * 83506047
5	Shaft, 1st & 2nd Gear Shift		AX4, AX5	83506055
6	Shaft, Front Reverse Gear Shift		AX4 AX5	83506053 83506052
7	Shaft, 5th Gear Shift		AX5	83500538
8	Shaft, Rear Reverse Gear Shift		AX4, AX5	83500536
9	Fork, 5th Gear Shift		AX5	83500637
10	Fork, Reverse Gear Shift		AX4, AX5	83500526
11	Fork, 1st & 2nd Gear Shift		AX4, AX5	83502662
12	Seal, Input		AX4, AX5	83500501
13	Bearing, Input Shaft	Front, 84/85 Front, 1986	AX4, AX5 AX4, AX5	83500643 83502681
14	Shaft, Input	84/85 1986	AX4, AX5 AX4, AX5	83500554 * 83502682
15	Blocking Ring, 3rd & 4th Gear Synchronizer		AX4, AX5	83500566
16	Needle Bearing, Input Shaft	13 Required	AX4, AX5	83502680
17	Spring, 3rd & 4th Gear Synchronizer		AX4, AX5	83500568
18	Hub, 3rd & 4th Gear Synchronizer		AX4, AX5	83500562
19	Key, 3rd & 4th Gear Synchronizer		AX4, AX5	83500565
20	Sleeve, 3rd & 4th Gear Synchronizer		AX4, AX5	83500563
21	Gear, 3rd		AX4, AX5	83500552
22	Bearing, 3rd Gear	Caged Roller Bearing	AX4, AX5	83500576
23	Main Shaft	LHD, 4WD	AX4, AX5	83503105
24	Bearing, 2nd Gear	Caged Roller Bearing	AX4, AX5	83500577
25	Gear, 2nd		AX4, AX5	83500551
26	Blocking Ring, 1st & 2nd Gear Synchronizer		AX4, AX5	83500567
27	Spring, 1st & 2nd Gear Synchronizer	2 Required	AX4, AX5	83500569
28	Hub, 1st & 2nd Gear Synchronizer		AX4, AX5	83500561
29	Gear, 1st & 2nd Reverse Sliding		AX4, AX5	83500555

* Not Currently Available

Continued on Next Page

Copyright © 2014 Crown Automotive Sales Co., Inc. All rights reserved.

Models AX4 & AX5 (Continued)

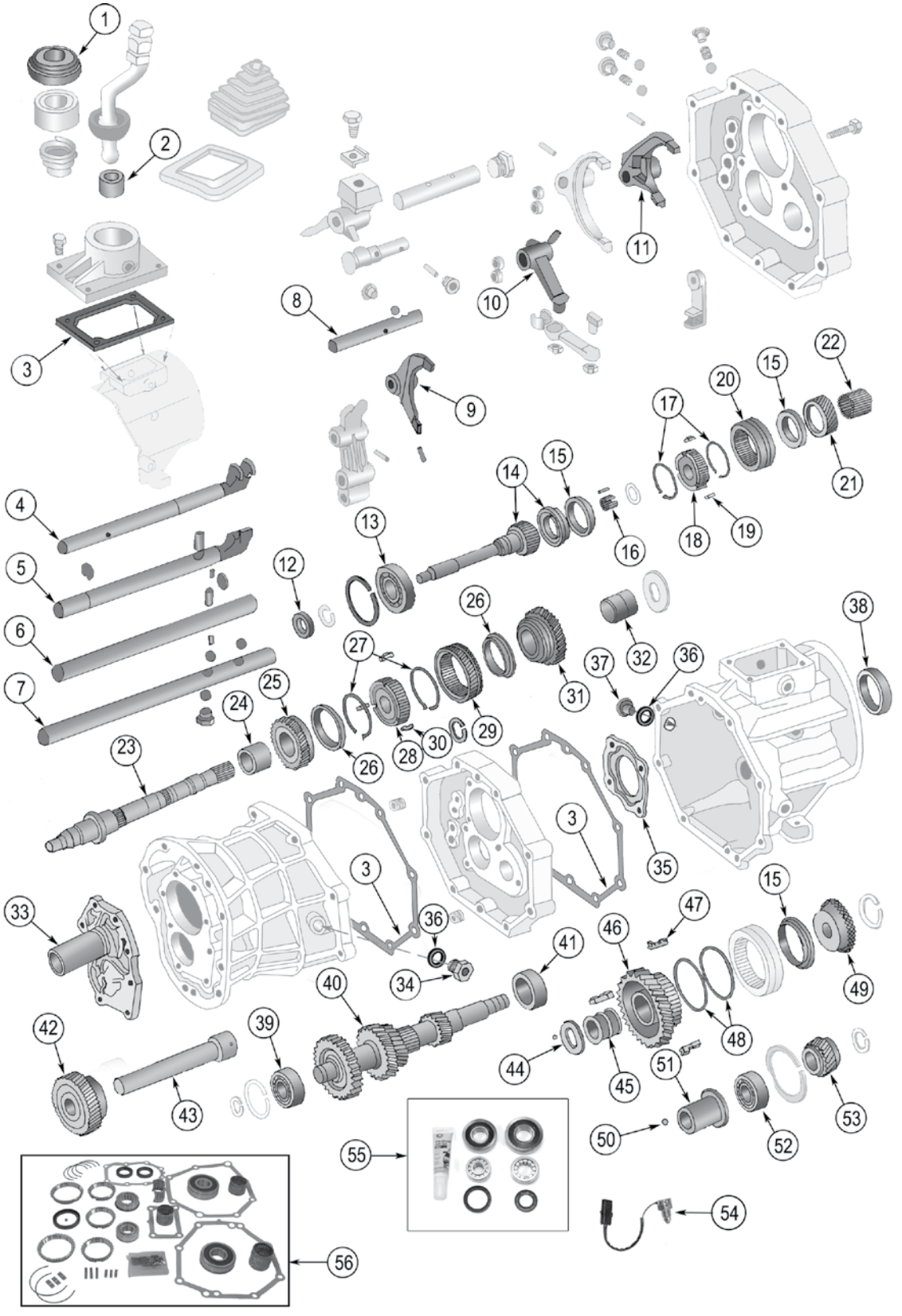

Copyright © 2014 Crown Automotive Sales Co., Inc. All rights reserved.

Models AX4 & AX5 (Continued)

Item #	Description	Comments	Model	Replaces Part#
30	Key, 1st & 2nd Gear Synchronizer		AX4, AX5	83500564
31	Gear, 1st		AX4, AX5	83500550
32	Bearing, 1st Gear	Caged Roller Bearing	AX4, AX5	8350057
33	Retainer, Front Bearing		AX4, AX5	83503112
34	Plug, Drain		AX4, AX5	83500512
35	Gasket, Fill or Drain Plug		AX4, AX5	83500513
36	Plug, Oil Filler		AX4, AX5	83500623
37	Retainer, Rear Bearing		AX4, AX5	83506034 *
38	Seal, Output	4WD	AX4, AX5	83503108
39	Bearing, Cluster Gear	Front	AX4, AX5	83506032
40	Cluster Gear		AX4, AX5	83500557
41	Bearing, Cluster Gear	Rear	AX4, AX5	83500580
42	Gear, Reverse Idler		AX4, AX5	83503555
43	Shaft, Reverse Idler		AX4, AX5	83500570
44	Thrust Washer, Cluster Gear		AX4, AX5	83506025
45	Bearing, 5th Gear	Caged Roller Bearing	AX5	83500644
46	Gear, Counter 5th		AX5	83506022
47	Key, 5th Gear Synchronizer		AX5	83500641
48	Spring, 5th Gear Synchronizer	2 Required	AX5	83500568
49	Spacer, 5th Gear		AX5	83500639
50	Ball, Reverse		AX4, AX5	83500573
51	Race, 1st Gear		AX4, AX5	83500560
52	Bearing, Main Shaft	Rear	AX4, AX5	83500575
53	Gear, Main Shaft 5th		AX5	83500971
54	Switch, Back Up Lamp		AX4, AX5	83500629
Crown Kits				
55	Bearing & Seal Kit		AX5	BKAX5E
56	Master Overhaul Kit		AX4, AX5	AX4EAX5EMASKIT

* Not Currently Available

Copyright © 2014 Crown Automotive Sales Co., Inc. All rights reserved.

Notes:

Copyright © 2014 Crown Automotive Sales Co., Inc. All rights reserved.

TRANSFER CASE

Dana 18 2
1941-1971 MB, CJ-2A, 3A, 3B, 5, 6, M38, M38A1
1956-1964 FC-150, FC-170
1947-1965 Willys Pickup, Sedan Delivery, Station Wagon

Dana 20 6
1972-1979 CJ-5, 6, 7
1966-1973 C101, C104 Commando
1962-1979 SJ, J-Series

Quadra-Trac Transfer Case 8
1976-1979 CJ-7
1973-1979 SJ, J-Series

Dana 300 10
1980-1986 CJ-5, 7, 8

NP 219 12
1980-1986 SJ, J-Series

NP 208 14
1980-1988 SJ, J-Series

NP 228/229 16
NP228: 1983-1985 SJ, J-Series
NP229: 1982-1991 SJ

Transfer Case Kits 18

Copyright © 2014 Crown Automotive Sales Co., Inc. All rights reserved.

Dana 18 Transfer Case

1941-1971 MB, CJ-2A, 3A, 3B, 5, 6, M38, M38A1
1956-1964 FC-150, FC-170
1947-1965 Willys Pickup, Sedan Delivery, Station Wagon

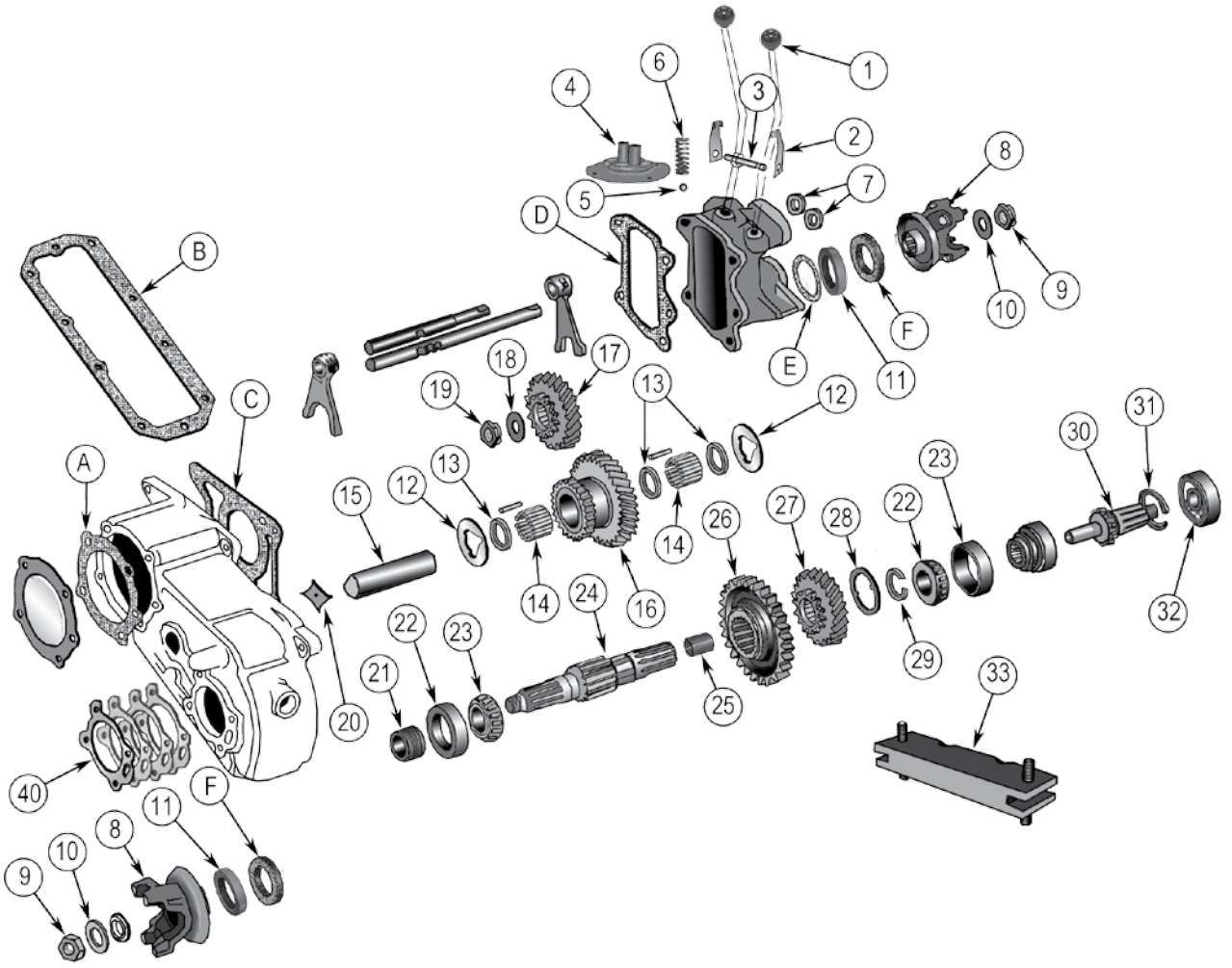

Item #	Description	Application	Comments	Replaces Part #
1	Knob, Gearshift	MB, CJ-2A, 3A, 3B, 5, 6, Pickup, Sedan Delivery, Station Wagon		J0914946
2	Spring, Shift Lever	MB, CJ-2A, 3A CJ-3B, 5, 6	Has a hole for shift pin Has a slot for shift pin	JA000970 J0801332
3	Pin, Shift Lever	All		JA000972
4	Boot, Shift Lever	CJ-2A, 3A, 3B, 5, 6, M38, M38A1 CJ-5, 6 w/ 4-134 F-Head, V6-225 Engine	w/ Dual Shift Levers w/ Single Shift Lever	J0801058 986495
5	Poppet Ball, Shift Rod	All		453593
6	Poppet Spring, Shift Rod	All		J0939001
7	Seal, Shift Rod	All	2 Required	JA000974

Copyright © 2014 Crown Automotive Sales Co., Inc. All rights reserved.

Dana 18

Item #	Description	Application	Comments	Replaces Part #
8	Yoke, Output	CJ-2A, 3A, 3B, 5, 6 FC-150, Pickup, Station Wagon, Sedan Delivery MB, CJ-2A, 3A, 3B, M38, M38A1	Front; 10 Splines w/ slinger Front or Rear; 10 Splines w/ slinger Rear	A1445 A1445 116714
9	Nut, Output	All	Front or Rear	J0801367
10	Washer, Output	All	Front or Rear	J4004913
11	Seal, Output	All All	Front or Rear; Open Style Front or Rear; Closed Style	J8123077 J0923896
12	Thrust Washer, Intermediate Shaft	MB CJ-2A, 3A, 3B, M38, M38A1, Pickup, Sedan Delivery, Station Wagon CJ-3B, 5, 6, FC-150, Pickup, Sedan Delivery, Station Wagon	w/ 3/4" Intermediate Shaft; 2 Required w/ 1-1/8" Intermediate Shaft, 2 Required w/ 1-1/4" Intermediate Shaft; 2 Required	A1000 J0642191 J8121813
13	Spacer, Intermediate Shaft	CJ-3B, 5, 6, FC-150, Pickup, Sedan Delivery, Station Wagon	w/ 1-1/4" Intermediate Shaft; 2 Required	J0809295
14	Bearing, Intermediate Shaft	MB CJ-2A, 3A, 3B, M38, M38A1, Pickup, Sedan Delivery, Station Wagon CJ-3B, 5, 6, FC-150, Pickup, Sedan Delivery, Station Wagon	2 Required (Caged) w/ 1-1/8" Intermediate Shaft, 2 Required (Caged) w/ 1-1/4" Intermediate Shaft; 48 Required (Roller)	A924 J0642190 J0809294
15	Shaft, Intermediate	MB CJ-2A, 3A, 3B, M38, M38A1, Pickup, Sedan Delivery, Station Wagon CJ-3B, 5, 6, FC-150, Pickup, Sedan Delivery, Station Wagon	3/4" Diameter 1-1/8" Diameter 1-1/4" Diameter	A998 J0642188 J0942115
16	Gear, Intermediate	CJ-2A, 3A, 3B, M38, M38A1, Pickup, Sedan Delivery, Station Wagon CJ-3B, 5, 6, FC-150, FC-170, Pickup, Sedan Delivery, Station Wagon	w/ 1-1/8" Intermediate Shaft; 34-21 Teeth w/ 1-1/4" Intermediate Shaft; 39-18 Teeth	J0642189 J0809293
17	Gear, Mainshaft	CJ-2A, 3A, M38, M38A1 CJ-3B, 5, 6, FC-150, FC-170, Pickup, Sedan Delivery, Station Wagon CJ-5, 6 w/ V6-225 Engine w/ T14 Transmission	26 Teeth; 6 Splines; Stamped 18-3-31 29/15 Teeth; 6 Splines 29 Teeth, 10 Splines; Stamped 18-8-50	A10469 J0809297 J0947382
18	Washer, Mainshaft	All		JA001410
19	Nut, Mainshaft	All	Slotted	JA000520
20	Plate, Intermediate Shaft Lock	All		JA001001*
21	Gear, Speedometer Drive	All Station Wagon, Sedan Delivery	4 teeth 6 teeth	A1511 J0910086
22	Cup, Bearing, Output Shaft	All	Front or Rear Output Shaft; 2 Required	J0051577
23	Bearing, Output Shaft	All	Front or Rear Output Shaft; 2 Required	J0051575
24	Shaft, Rear Output	All		J0807767
25	Pilot Bushing, Front Output Shaft	All		JA000987
26	Gear, Sliding, Front Output Shaft	CJ-2A, 3A, 3B, M38, M38A1, Pickup, Sedan Delivery, Station Wagon CJ-3B, 5, 6, FC-150, FC-170, Pickup, Sedan Delivery, Station Wagon	39 Teeth, 11 Splines; Stamped 18-8-17 33 Teeth, 12 Splines; Stamped 18-8-11	A15045 809290

* Not Currently Available

Continued on Next Page

Copyright © 2014 Crown Automotive Sales Co., Inc. All rights reserved.

Dana 18 Transfer Case (Continued)

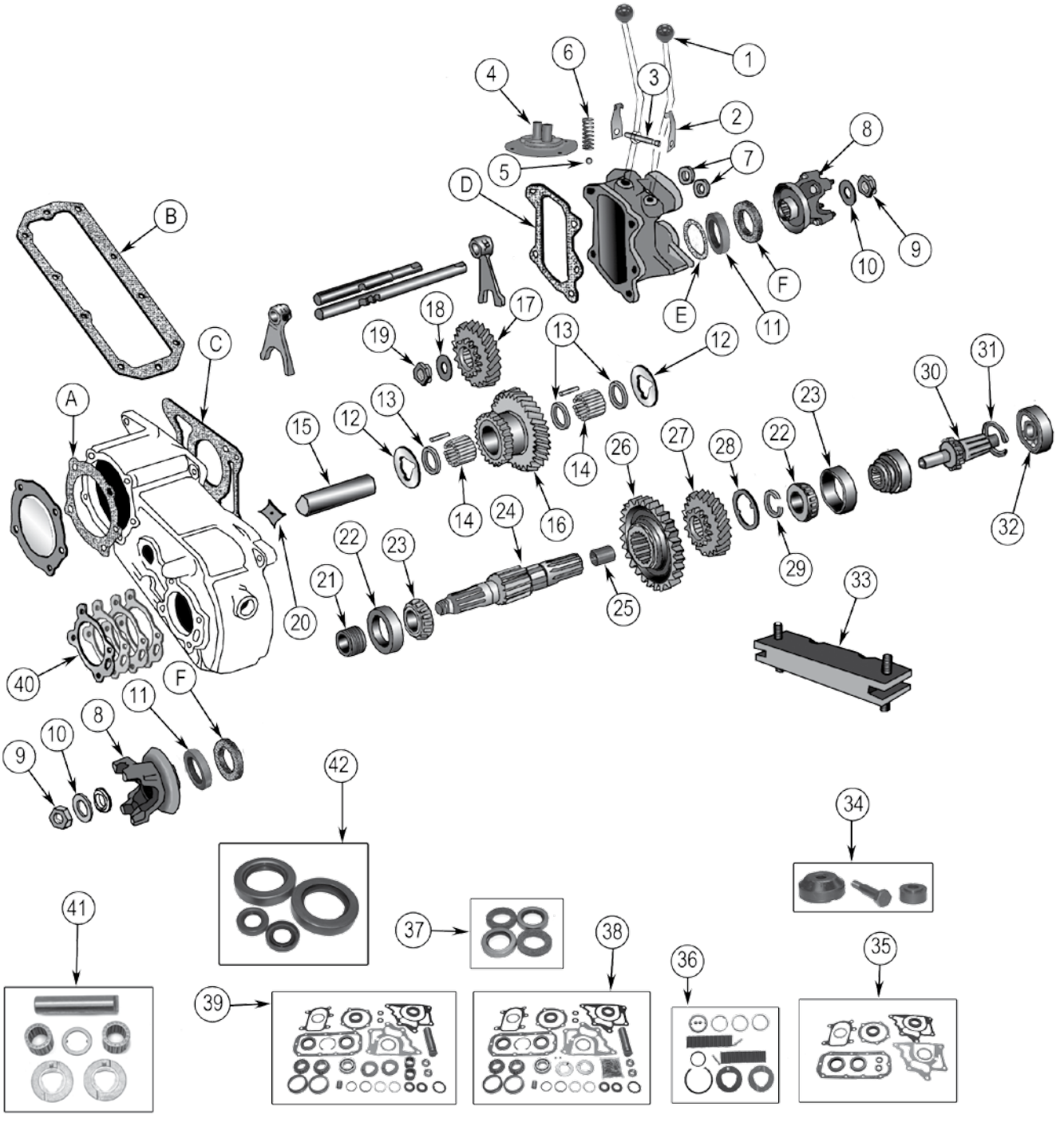

Copyright © 2014 Crown Automotive Sales Co., Inc. All rights reserved.

Dana 18 (Continued)

Item #	Description	Application	Comments	Replaces Part #
27	Gear, Front Output Shaft	CJ-2A, 3A, 3B, M38, M38A1, Pickup, Sedan Delivery, Station Wagon CJ-3B, 5, 6, FC-150, Pickup, Sedan Delivery, Station Wagon	26/12 Teeth 29/12 teeth, Stamped 18-8-24	A15044 J0809291
28	Thrust Washer, Front Output Gear	All		JA000990
29	Snap Ring, Front Output Gear	All		JA000991
30	Shaft, Front Output	All		807892*
31	Snap Ring, Front Output Shaft Bearing	All		A976
32	Bearing, Front Output Shaft	All		JA001007
33	Transmission Mount	CJ-2A, 3A, 3B, 5, 6, MB, FC-150 CJ-5, 6	w/ 4-134 L or F-Head Engine w/ V6-225 Engine	JA006156 J0939995
34	Rear Mount Kit	All	Includes 2 Mounts, 1 Bolt, 1 Washer, and 1 Nut	926671K
35	Gasket and Seal Set	All	Includes A, B, C, D, E, 7, and 11	J0923300
A	Gasket, PTO Cover	All		JA001509
B	Gasket, Inspection Cover			JA000954
C	Gasket, Transmission to Transfer Case	All w/ 4-134 L or F-Head Engine 66/71 CJ-5, 6 w/ V6-225 Engine w/ 3-Speed Transmission 54/64 Pickup, Sedan Delivery, Station Wagon w/ 6-226, 6-230 Engines 66/71 CJ-5, 6 w/ V6-225 Engine w/ 4-Speed Transmission		J0936612 J0973974 J0937974 J0936615
D	Gasket, Front Output Housing	All		JA000957
E	Gasket, Output	All	Front or Rear Output; 2 Required	JA001134
F	Felt Seal, Output	All	Front or Rear Output; 2 Required	J0932295
36	Small Parts Kit	All w/ 1-1/8" Intermediate Shaft All w/ 1-1/4" Intermediate Shaft	Includes 12, 14, 28, and 29, and 31 Includes 5, 12, 13, 14, 28, 29, 31	922717 J0935758
37	Seal Kit, Output Shaft	All	Front & Rear; Includes 2 Output Seals and 2 Felt Seals	J0120751
38	Master Installation Kit	All w/ 1-1/4" Intermediate Shaft	Includes 6, 9, 10, 15, 22, 23, 25, 32, 35, 36, 40	D18L-MASKIT
39	Master Installation Kit	All w/ 1-1/8" Intermediate Shaft	Includes 6, 9, 10, 15, 22, 23, 25, 32, 35, 36, 40	D18E-MASKIT
40	Front Output Shaft Shim Set	All		JA006753
41	Intermediate Shaft Kit	All w/ 3/4" Intermediate Shaft All w/ 1-1/8" Intermediate Shaft All w/ 1-1/4" Intermediate Shaft	Includes Intermediate Shaft, Bearings, and Thrust Washers Includes Intermediate Shaft, Bearings, and Thrust Washers Includes Intermediate Shaft, Roller Bearings, Thrust Washers, and Spacers	A998X 642188K 942115K
42	Oil Seal Kit	All	Includes Front and Rear Output Seals and Shift Rod Seals	A7445

* Not Currently Available

Copyright © 2014 Crown Automotive Sales Co., Inc. All rights reserved.

Dana 20 Transfer Case

1972-1979 CJ-5, 6, 7

1966-1973 C101, C104 Commando

1962-1979 SJ, J-Series

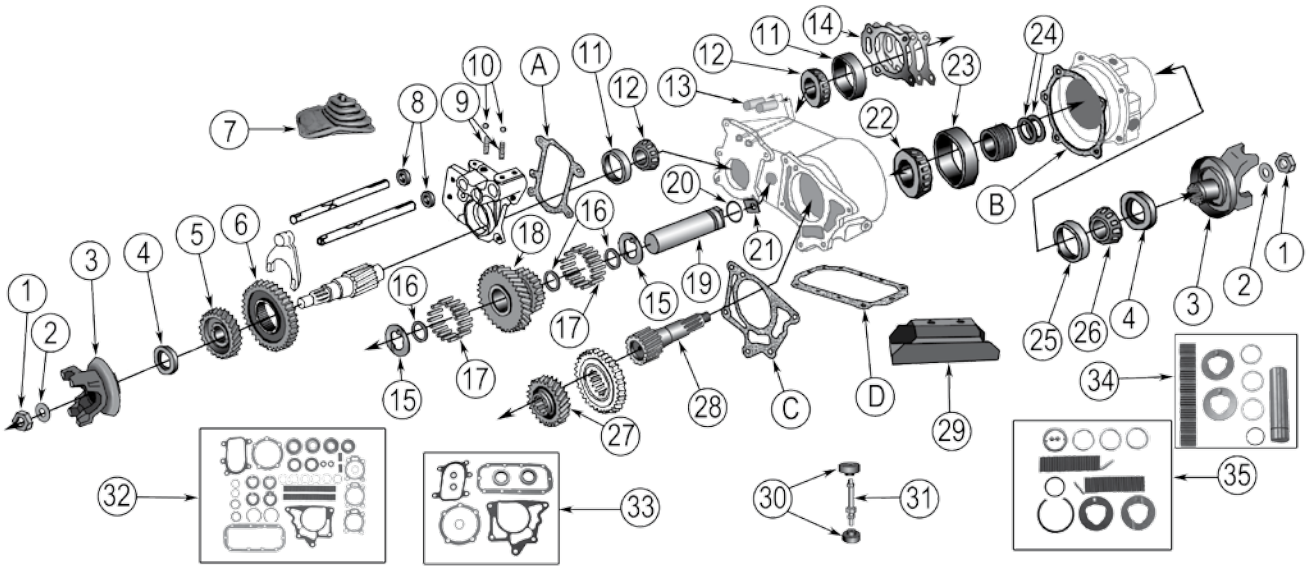

Item #	Description	Application	Comments	Replaces Part #
1	Nut, Output	All	Front or Rear	J0801367
2	Washer, Output	All	Front or Rear	J4004913
3	Yoke, Output	All All	Front or Rear; 10 Splines Front or Rear; 26 Splines (U-bolt design)	A1445 J0935685
4	Seal, Output	All All	Front or Rear; Open Style Front or Rear; Closed Style	J8123077 J0923896
5	Gear, Front Output Shaft	CJ-5, 6, 7, C101, C104 SJ, J-Series w/ Gear Stamped 18-8-44 SJ, J-Series w/ Gear Stamped 18-8-18	Stamped 18-8-44, 26 teeth Stamped 18-8-44, 26 teeth Stamped 18-8-18; 26 Teeth	J0946784 J0946784 A15044
6	Gear, Front Output Shaft Sliding	All	Stamped 18-8-28, 31 teeth	J0933735
7	Boot, Shifter	72/75 CJ-5, 6 w/ Single Shift Lever 76/79 CJ-5, 7 w/ Single Shift Lever		986495 J5353263
8	Seal, Shift Rod	All	2 Required	JA000974
9	Poppet Spring, Shift Rod	CJ-5, 6, 7, C101, C104 65/79 SJ, J-Series	2 Required 2 Required	J0939001 J0939001
10	Poppet Ball, Shift Rod	All	2 Required	453593
11	Cup, Front Output Shaft Bearing	All	Inner or Outer; 2 Required	J0051577
12	Bearing, Front Output Shaft	All	Inner or Outer; 2 Required	J0942113
13	Cap, Shift Rod	All	2 Required	J0934281
14	Shim Set, Front Output Shaft	All		JA006753
15	Thrust Washer, Intermediate Shaft	All	2 Required	J8121813

Copyright © 2014 Crown Automotive Sales Co., Inc. All rights reserved.

Dana 20

Item #	Description	Application	Comments	Replaces Part #
16	Spacer, Intermediate Shaft	All	3 Required	J0809295
17	Roller Bearing, Intermediate Shaft	All	48 Required	J0809294
18	Gear, Intermediate	CJ-5, 6, 7 C101, C104, SJ, J-Series w/ Gear Stamped 18-5-16	Stamped 18-5-16, 34-20 teeth Stamped 18-5-16, 34-20 teeth	J0946786 J0946786
19	Shaft, Intermediate	All	1-1/4" Diameter	J0942115
20	O-Ring, Intermediate Shaft	All		J0942114
21	Plate, Intermediate Shaft Lock	All		JA001001*
22	Bearing, Rear Output Shaft	All	Inner	J0052799
23	Cup, Rear Output Shaft Bearing	All	Inner	J0052800
24	Shim Set, Rear Output Shaft	All		J0933743
25	Cup, Rear Output Shaft	All	Outer	J3124570
26	Bearing, Rear Output Shaft	All	Outer	J0933737
27	Gear, Mainshaft	72/75 CJ-5, 6 w/ T14 Transmission 72/75 CJ-5, 6 W/ T15, T18 Transmissions 76/79 CJ-5, 7 w/ Gear Stamped 18-8-46 76/79 CJ-5, 7 w/ Gear Stamped 18-8-55 66/73 C101, C104 w/ T14 Transmission 66/73 C101, C104 w/ T15, T18 Transmissions 66/73 C101, C104 w/ Automatic Transmission 62/78 SJ, J-Series w/ Gear Stamped 18-8-49 62/78 SJ, J-Series w/ Gear Stamped 18-8-46 62/78 SJ, J-Series w/ Gear Stamped 18-8-43 79 SJ, J-Series	Stamped 18-8-49; 26 Teeth; 10 Splines Stamped 18-8-46; 26 Teeth; 6 Splines Stamped 18-8-46; 26 Teeth; 6 Splines Stamped 18-8-55; 26 teeth; 6 Splines Stamped 18-8-49; 26 Teeth; 10 Splines Stamped 18-8-46; 26 Teeth; 6 Splines Stamped 18-8-43; 26 Teeth; 15 Splines Stamped 18-8-49; 26 Teeth; 10 Splines Stamped 18-8-46; 26 Teeth; 6 Splines Stamped 18-8-43; 26 Teeth; 15 Splines Stamped 18-8-46; 26 Teeth; 6 Splines	J0947339 J0946574* J0946574* J5354506 J0947339 J0946574* J0946785 J0947339 J0946574* J0946785 J0946574*
28	Shaft, Rear Output	All	15 Teeth; 26 Splines	J8130293*
29	Transmission Mount	CJ-5, 6, 7 C101 w/ 4-134 F-Head Engine C101 w/ 3.7L (V6-225) Engine C101 w/ 5.0L (V8-304) Engine 66/84 SJ, J-Series w/ T18 Transmission 72/91 SJ, J-Series w/ T14, T15, T85, T86, A727 Transmissions		J1370910 JA006156 J0939995 J1370910 J0939995 J1370910
30	Insulator, Transmission Mount Stud	CJ-5, 6, 7 SJ, J-Series	2 Required	J0945266
31	Stud, Transmission Mount	CJ-5, 6, 7 SJ, J-Series		J5358879
32	Master Overhaul Kit	All	Includes 11, 12, 13, 14, 19, 22, 23, 24, 25, 26, 33, 35	D20-MASKIT
33	Gasket & Seal Kit			J8130995
A	Gasket, Front Output Housing	All		JA000957
B	Gasket, Rear Output Housing	All		JA007361
C	Gasket, Transmission to Transfer Case	CJ-5, 7, SJ, J-Series CJ-5, 6, 7, C101, C104, SJ, J-Series	w/ 4 Speed Transmissions w/ 3-Speed Transmissions	J0936615 J0937974
D	Gasket, Access Cover	All		JA000954
34	Intermediate Shaft Kit	All	Includes Intermediate Shaft, Roller Bearings, Thrust Washers, and Spacers	942115K
35	Small Parts Kit	All	Includes 10, 15, 16, 17	J0935758

* Not Currently Available

Copyright © 2014 Crown Automotive Sales Co., Inc. All rights reserved.

Quadra-Trac Transfer Case

1976-1979 CJ-7
1973-1979 SJ, J-Series

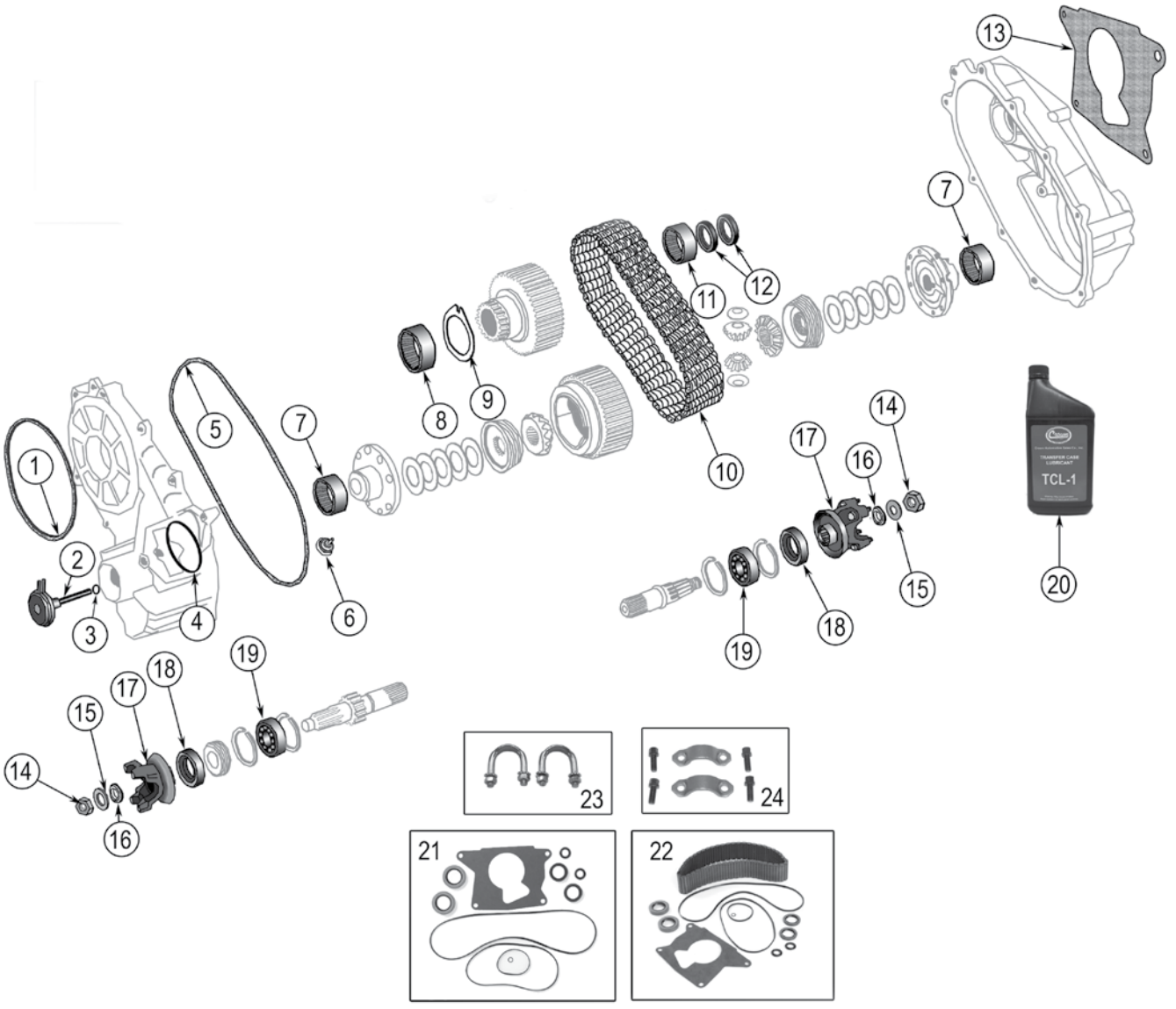

Copyright © 2014 Crown Automotive Sales Co., Inc. All rights reserved.

Quadra-Trac

Item #	Description	Comment	Replaces Part #
1	Gasket, PTO or Low-Range Cover		J8122406
2	Diaphragm, Vacuum Shift		J8122991*
3	O-Ring, Vacuum Shift Diaphragm		J8123024
4	Seal, Shift Fork Cover		J8123023
5	Seal, Case Half		J8122389
6	Switch, 4 Wheel Drive Indicator		J3211322
7	Bearing, Differential	Front or Rear	J8122390
8	Bearing, Drive Sprocket	Rear	J8122395*
9	Thrust Washer, Drive Sprocket		J8122710
10	Chain, Transfer Case	96 Pins w/ Overdrive; 92 Pins	J8122392 8122392DN
11	Bearing, Drive Sprocket	Front	J8122390
12	Seal, Input Shaft	2 Required	J8122404
13	Gasket, Transmission to Transfer Case		J5358840
14	Nut, Output	Front or Rear	J0801367
15	Washer, Output	Front or Rear	J4004913
16	Seal, Outer	Front or Rear	J5353347
17	Yoke, Output	Front; 10 Splines w/ Slinger; U-Bolt Style Rear; 10 Splines w/o Slinger; Strap Style Front; 26 Splines w/o Slinger; U-Bolt Style	A1445 J5354060 J8129363
18	Seal, Inner	Front or Rear	J8123077
19	Bearing, Output	Front or Rear	J8122391*
20	Transfer Case Fluid	1 Quart	TCL-1
21	Gasket & Seal Set	Includes 1, 3, 4, 5, 12, 13, 16, 18	J8125030
22	Transfer Case Chain Kit	Includes 10, 21	8122392K
23	U-Bolt Kit	Includes 2 U-Bolts, 4 Washers, and 4 Nuts	A490K
24	U-Joint Strap Kit	Includes 2 Straps and 4 Hex Bolts	4006698K

* Not Currently Available

Copyright © 2014 Crown Automotive Sales Co., Inc. All rights reserved.

Dana 300 Transfer Case

1980-1986 CJ-5, 7, 8

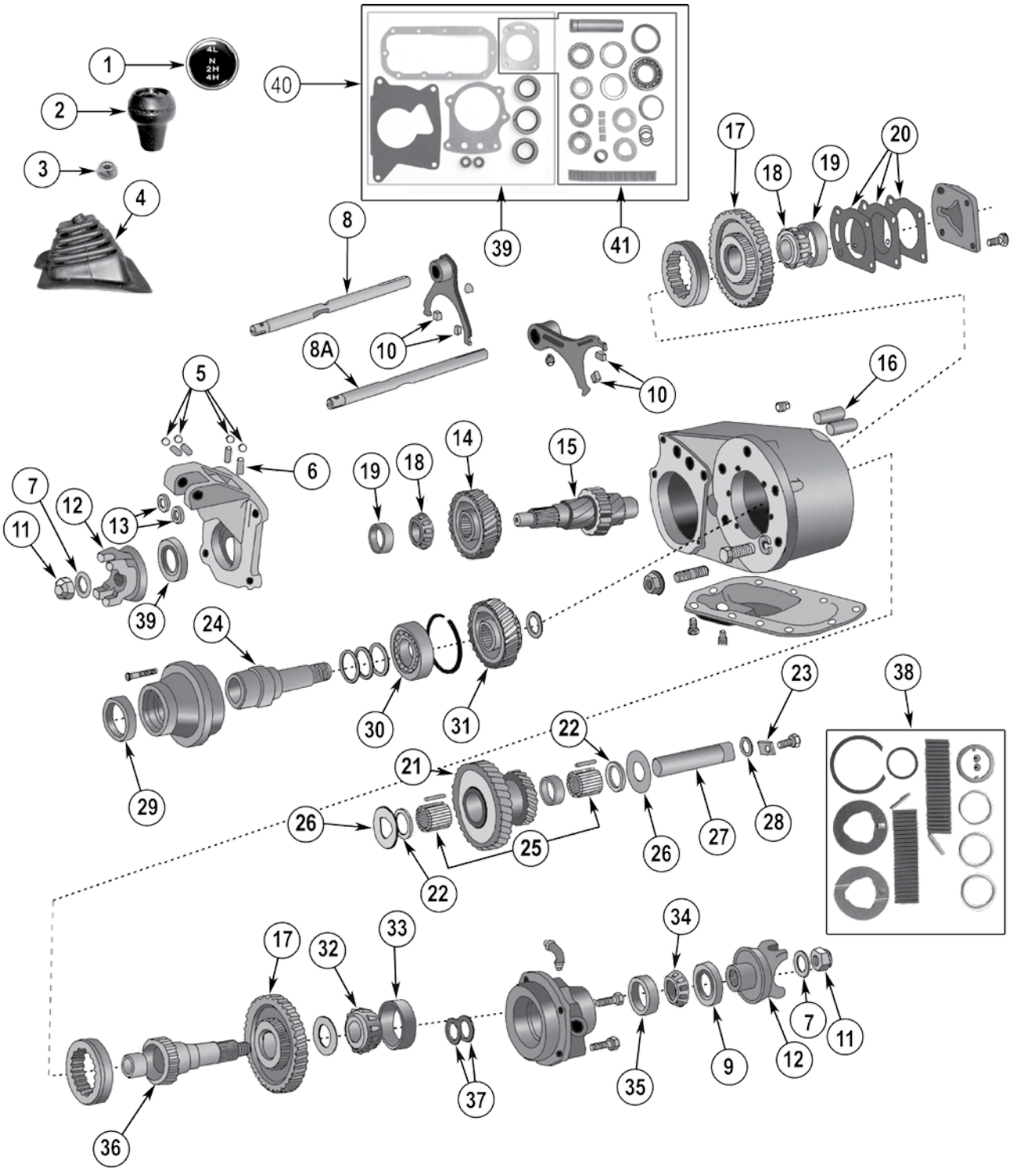

Copyright © 2014 Crown Automotive Sales Co., Inc. All rights reserved.

Dana 300

item#	Description	Comments	Replaces Part #
1	Insert, Shift Knob		J3241430
2	Knob, Shift		J3241062
3	Nut, Shift Control		J4006495
4	Boot, Shifter	w/ SR4, T4, T5 w/ T176 - T177 (Double Boot)	J5752009 5752141
5	Ball, Chrome		453593
6	Poppet Spring, Shift Rod		J0939001
7	Washer, Yoke	Rear Output	J4004913
8	Rod, Shift	Front	J8131673 *
8A	Rod, Shift	Rear	J8131672
9	Seal, Output	Front or Rear Output	J8131669
10	Pad, Shift Fork	4 Required	J8131670
11	Nut, Output	Front or Rear Output	J0801367
12	Yoke, Output	Bolt & Strap Type, Front or Rear Output U-Bolt Yoke, Front or Rear Output	J8131656 J0935685
13	Seal, Shift Rod	2 Required	JA000974
14	Gear, Front Output		J8131680
15	Shaft, Front Output		J8131660
16	Cap, Shift Rod	2 Required	J0934281
17	Gear, Sliding Drive	2 Required	J8131679 *
18	Bearing Cone, Front Output	Front or Rear	J3156063
19	Bearing Cup, Front Output	Front or Rear	J3156062
20	Shim Set, Front Output Access Cover		J8131668
21	Gear, Intermediate		J8131678 *
22	Spacer, Intermediate Shaft	2 Required	J0809295
23	Plate, Intermediate Shaft Lock		JA001001 *
24	Shaft, Input		J8131687 *
25	Needle Bearing, Intermediate Gear	48 Required	J0809294
26	Thrust Washer, Intermediate Shaft	2 Required	J8121813
27	Shaft, Intermediate		J0942115
28	Seal, Intermediate Shaft		J0942114
29	Seal, Input		J8131684
30	Bearing, Input		J8131682
31	Gear, Input		J8131685
32	Bearing Cone, Rear Output Shaft	Front	J8134239
33	Bearing Cup, Rear Output Shaft	Front	J0052800
34	Bearing Cone, Rear Output Shaft	Rear	J0933737
35	Bearing Cup, Rear Output Shaft	Rear	J3124570
36	Shaft, Rear Output		J8133793 *
37	Shim Kit, Rear Output		J0933743
38	Small Parts Kit		J0935758
39	Gasket & Seal Kit		D300-GS
40	Master Overhaul Kit		D300-MASKIT
41	Bearing Kit		D300-BK

* Not Currently Available

Copyright © 2014 Crown Automotive Sales Co., Inc. All rights reserved.

NP 219 Transfer Case

1980-1986 SJ, J-Series

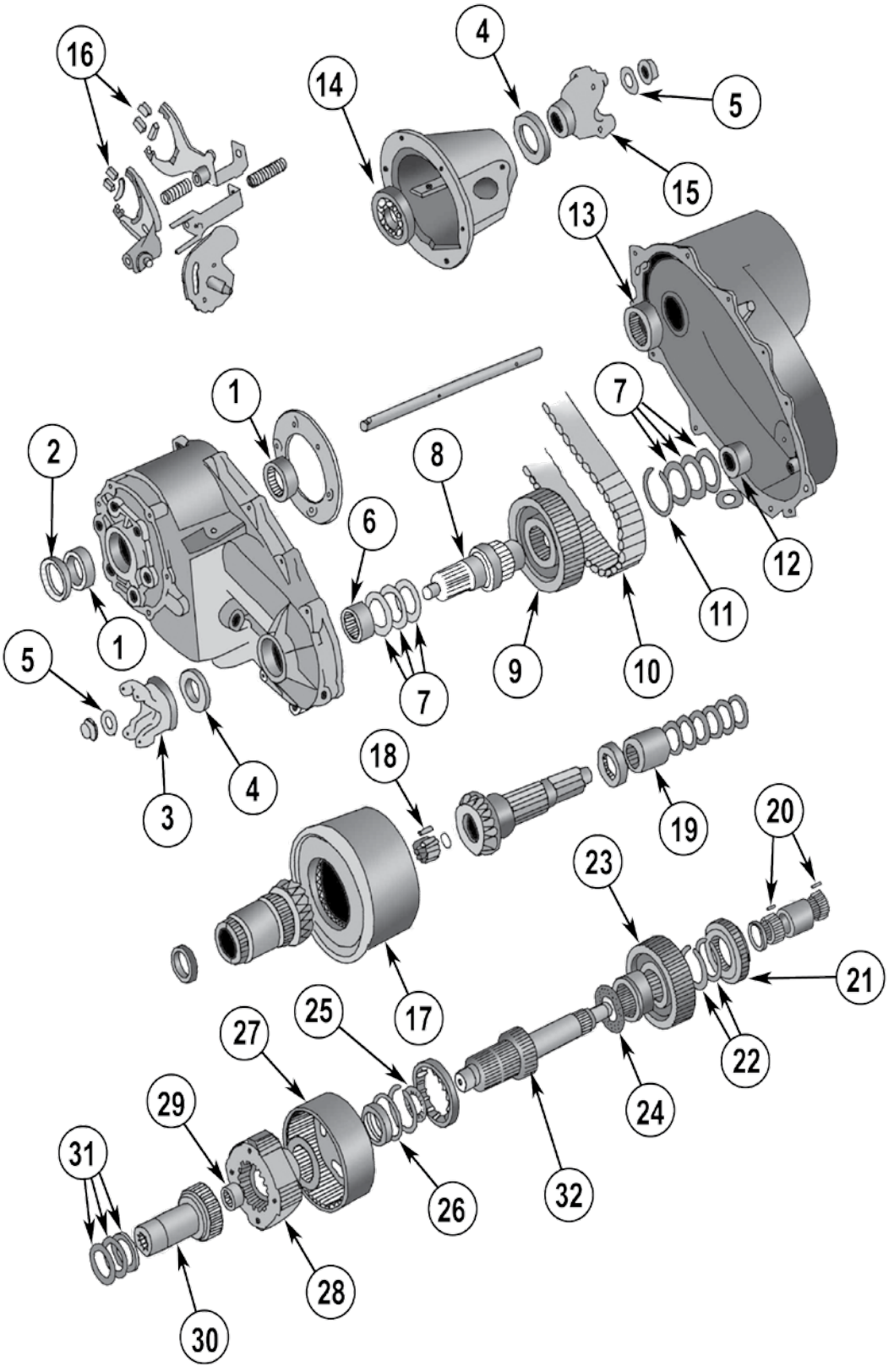

Copyright © 2014 Crown Automotive Sales Co., Inc. All rights reserved.

NP 219

Item #	Description	Comments	Replaces Part #
1	Bearing, Input Shaft		J8130868
2	Seal, Input Shaft		J5359457
3	Yoke, Front Output		4856142
4	Seal, Output Shaft	Front or Rear	4762899
5	Seal Washer, Output Shaft	Front or Rear	J8130815
6	Bearing, Front Output Shaft	Front	J8130869
7	Bearing Assembly, Front Output Shaft	2 Required	J8130819
8	Shaft, Front Output		J8130850 *
9	Sprocket, Front Output Shaft		J8130849 *
10	Chain, Transfer Case		J8130831
11	Retaining Ring		J8130802 *
12	Bearing, Front Output Shaft	Rear	4269189
13	Bearing, Rear Output Shaft	Front	J8130835 *
14	Bearing, Rear Output Shaft	Rear	J8136626
15	Yoke, Rear Output		J8130817 *
16	Pad Kit, Shift Fork		J8130859
17	Viscous Coupling		J8130800 *
18	Pilot Roller Bearing		J8130804 *
19	Gear, Speedometer Drive		J8130827 *
20	Roller Kit, Side Gear	Includes 85 Roller Bearings	J8130846
21	Gear, Viscous Clutch		J8130801 *
22	Retaining Ring		J8130802 *
23	Sprocket, Main Shaft		J8130849 *
24	Thrust Washer, Main Shaft		J8130844 *
25	Thrust Bearing, Main Shaft		J8130879
26	Thrust Washer		J8130865 *
27	Annulus Gear		4167954 *
28	Planetary Gear		4329198 *
29	Bearing, Input		J8130878
30	Gear, Input		J8130877 *
31	Thrust Bearing Kit, Input		J8130875
32	Main Shaft		J8130842 *

* Not Currently Available

Copyright © 2014 Crown Automotive Sales Co., Inc. All rights reserved.

NP 208 Transfer Case

1980-1986 SJ, J-Series

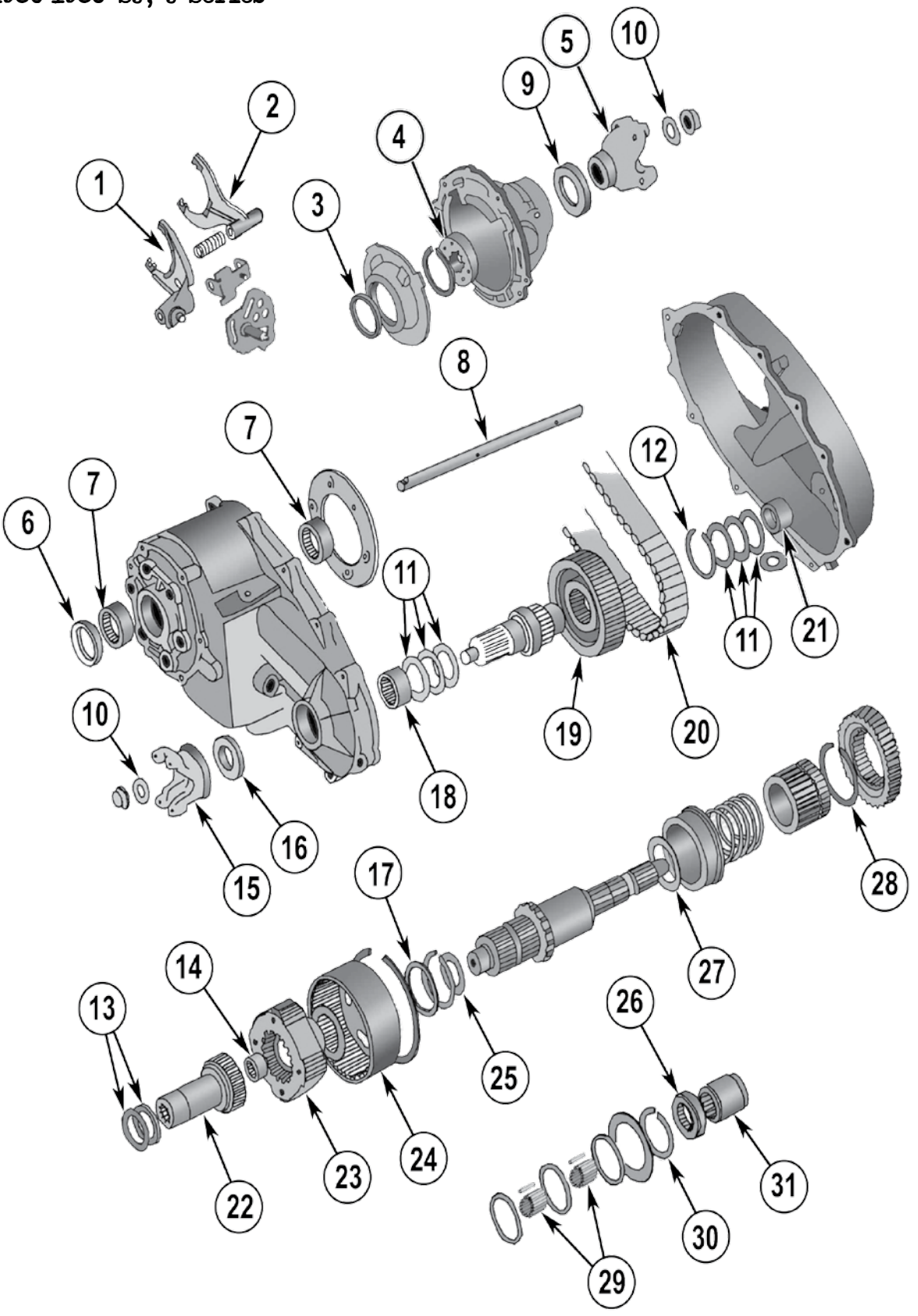

Copyright © 2014 Crown Automotive Sales Co., Inc. All rights reserved.

NP 208

Item #	Description	Comments	Replaces Part #
1	Fork, Range Shift		J8130858 *
2	Fork, Mode Shift		J8130851 *
3	Seal, Oil Pump Housing		J8130982
4	Bearing, Rear Output		J8136626
5	Yoke, Rear Output	80/86 87/88	J8130817 * 83503578 *
6	Seal, Input Shaft		J5359457
7	Bearing, Input Shaft		J8130868
8	Shift Rail		J8130822 *
9	Seal, Rear Output Shaft		J8130808
10	Seal Washer, Output Shaft	Front or Rear	J8130815
11	Bearing Assembly, Front Output Shaft		J8130819
12	Retaining Ring		4167991 *
13	Thrust Bearing Kit, Input		J8130875
14	Bearing, Input Shaft		J8130878
15	Yoke, Front Output		4856142
16	Seal, Front Output		4762899
17	Thrust Washer		J8130865 *
18	Bearing, Front Output Shaft	Front	J8130869
19	Sprocket, Driven		J8130975 *
20	Chain, Transfer Case		J8130977
21	Bearing, Output Shaft	Rear	4269189
22	Gear, Input		J8130877 *
23	Planetary Gear		J8130862 *
24	Annulus Gear		J8130864 *
25	Thrust Bearing, Main Shaft		J8130879
26	Oil Pump		J8130826 *
27	Thrust Washer		J8130967 *
28	Ring, Sprocket Stop		4167984 *
29	Roller Bearing Kit		J8130972
30	Ring, Retaining		J8130974
31	Gear, Speedometer Drive		J8130827

* Not Currently Available

Copyright © 2014 Crown Automotive Sales Co., Inc. All rights reserved.

NP 228/229 Transfer Cases

NP228: 1983-1985 SJ, J-Series

NP229: 1982-1991 SJ

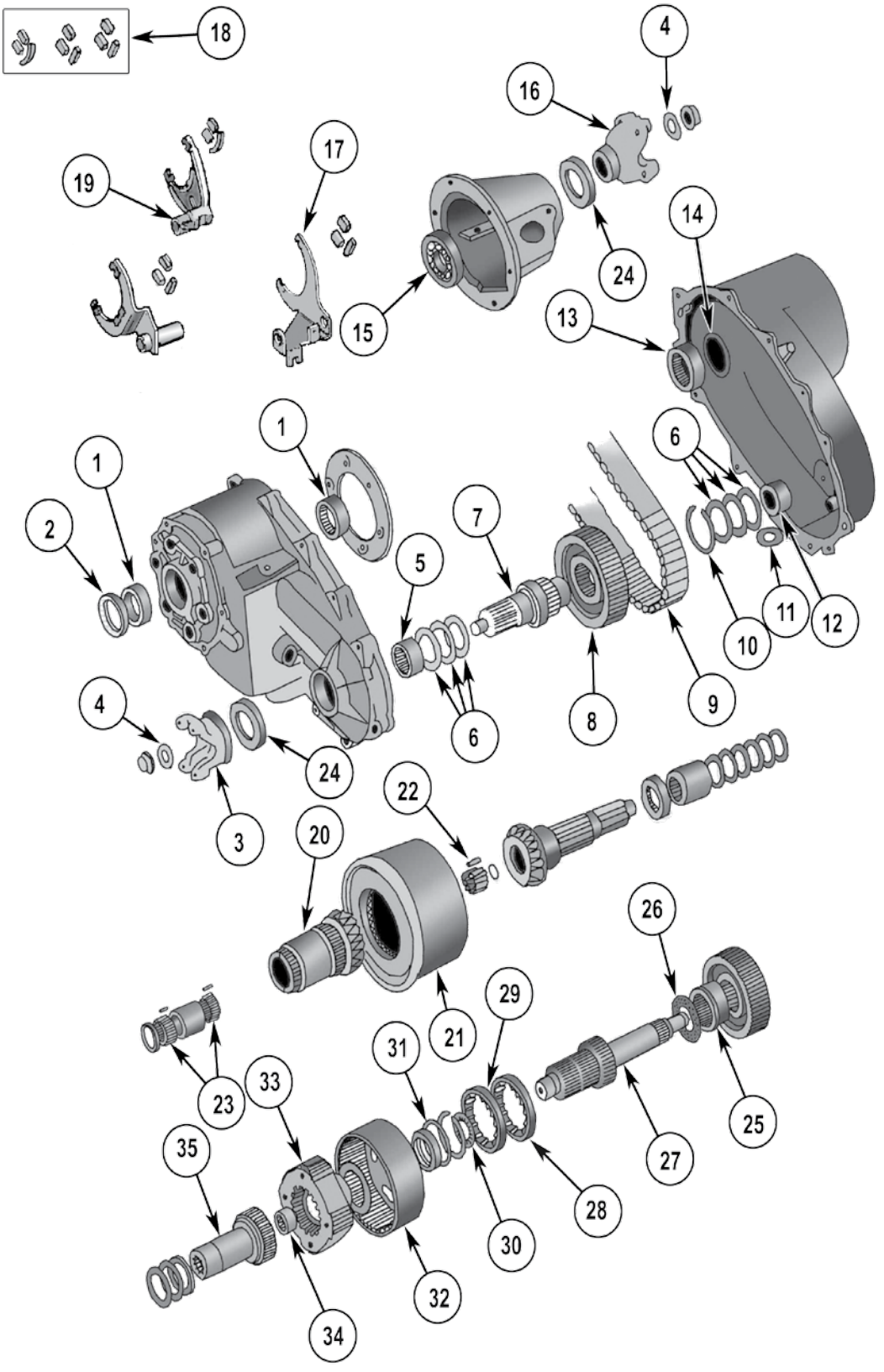

Copyright © 2014 Crown Automotive Sales Co., Inc. All rights reserved.

NP 228/229

Item #	Description	Comments	Replaces Part #
1	Bearing, Input Shaft		J8130868
2	Seal, Input Shaft		J5359457
3	Yoke, Front Output		4856142
4	Seal Washer, Output Shaft	Front or Rear	J8130815
5	Bearing, Front Output Shaft	Front	J8130869
6	Bearing Assembly, Front Output Shaft	2 Required	J8130819
7	Shaft, Front Output		J8130850 *
8	Sprocket, Drive		83500491 *
9	Chain, Transfer Case		J8130831
10	Retaining Ring		J8130802 *
11	Magnet		3681601
12	Bearing, Front Output Shaft	Rear	4269189
13	Bearing, Rear Output Shaft	Front	J8133644 *
14	Seal, Rear Output		J8130982
15	Bearing, Rear Output Shaft	Rear	J8136626
16	Yoke, Rear Output	82/89 90/91	83503578 * 13775 *
17	Fork, Mode Shift		J8134275 *
18	Pad Kit, Shift Fork		15866
19	Fork, Range Shift		15618
20	Side Gear		13836 *
21	Viscous Coupling	NP228 NP229	83502517 * J8130800 *
22	Roller Bearing		J8130804 *
23	Roller Kit, Side Gear	Includes 85 Roller Bearings	J8130846
24	Seal, Output Shaft	Front or Rear	4762899
25	Side Clutch Gear		J8133633 *
26	Main Shaft Thrust Washer		J8130844 *
27	Main Shaft		15636 *
28	Collar, Shift		16111
29	Collar, Shift		16112
30	Thrust Bearing, Main Shaft		J8130879
31	Thrust Washer		4167959 *
32	Annulus Gear		4167954 *
33	Planetary Gear		4329198 *
34	Bearing, Input Shaft	Rear	J8130878
35	Shaft, Input		83500492

* Not Currently Available

Copyright © 2014 Crown Automotive Sales Co., Inc. All rights reserved.

Transfer Case Kits

Transfer Case Mount Kit

Replaces Part #
926671K
For Dana 18 Transfer Case

Gasket & Seal Kit For Quadra-Trac

Replaces Part #
J8125030
For Quadra-Trac Transfer Case

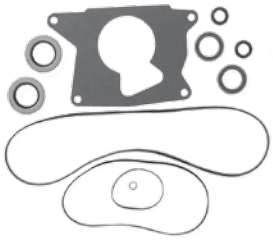

U-Bolt Yoke Kit

Replaces Part # **D300YOKEUBK**

For Dana 300 Transfer Case Front or Rear Output

Includes: Yoke, U-Bolts w/ Washers & Nuts, Oil Seal, Washer and Nut

Transfer Case Master Overhaul Kits

Includes: All Bearings, Oil Seals and Gaskets

** Also Includes Small Parts Kit*

Transfer Case	Years	Replaces Part #
Dana 20	72/79	**D20-MASKIT**
Dana 18	46/53 (Early) w/ 1-1/8" Shaft	**D18E-MASKIT**
Dana 18	54/71 (Late) w/ 1-1/4" Shaft	**D18L-MASKIT**

Includes: All Bearings, Oil Seals, Gaskets and Fork Inserts

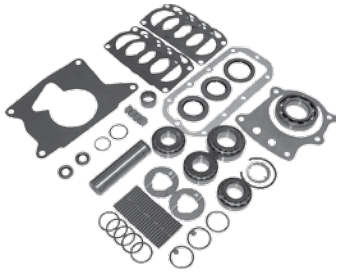

Transfer Case	Years	Replaces Part #
Dana 300	80/86	**D300-MASKIT**

Gasket & Seal Kits Dana Transfer Cases

Replaces Part #
D300-GS
For Dana 300 Transfer Case

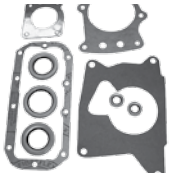

Replaces Part #
J0923300
For Dana 18 Transfer Case

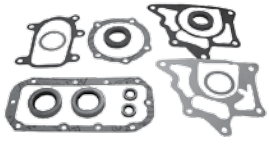

Replaces Part #
J8130995
For Dana 20 Transfer Case

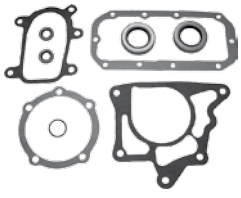

Intermediate Shaft Kits

Replaces Part #
942115K
For Dana 18, 20 & 300 Transfer Case w/1-1/4" Shaft - **Includes:** Shaft, Bearings, Seal, Spacers and Washers

Replaces Part #
642188K
For Dana 18 Transfer Case w/ 1-1/8" Shaft - **Includes:** Shaft, Bearings, Seal and Washers

Replaces Part #
A998X
For Dana 18 Transfer Case w/ 3/4" Shaft Kit - **Includes:** Shaft, Bearings and Washers

Copyright © 2014 Crown Automotive Sales Co., Inc. All rights reserved.

Accessories and Upgrades for Jeep® Enthusiasts

COMPLETE TOP

RT Off-Road's Complete Soft Tops include everything needed to install a soft top: Soft Top, Windows, Frame, & Hardware. Each top also includes soft top disconnects, a soft top storage bag for easy and safe storage, as well as other features that are built into the top, like storage pockets. The improved frame design allows for ease of use and folds down when not in use.

Black Diamond

Model	Year	Tinted Windows	Door Type	Replaces Part #
CJ-7	1976-86	Yes	Full	**CT20035T**

BEACH TOPPERS

Enjoy the open air feel while staying protected from direct sunlight and unexpected rain. Available for CJ, YJ, and TJ Wranglers™.

Model	Year	Color	Replaces Part #
CJ-5, 7	1976-83	Black	**BT10101**
M38-A1, CJ-5	1952-75	Black	**BT10001**

WIND BREAKERS

Deflects air above the passenger area and reduces draft, noise, and moisture. Clear plastic windows provide excellent visibility.

Model	Year	Color	Replaces Part #
CJ-5, 7, 8	1976-86	Black Diamond	**WB10035**
CJ-5, 7, 8	1976-86	Spice	**WB10037**
CJ-5, 7, 8	1976-86	Black Denim	**WB10015**

FULL COVER

These water resistant covers are designed to protect your vehicle from sun, dirt, dust, moisture and pollution, while maintaining breathability to avoid moisture and temperature build-up. Includes lock, cable and storage bag.

Model	Year	Color	Replaces Part #
CJ-7	1976-86	Gray	**FC10009**

CAB ONLY COVER

These cab covers are designed to protect the interior of your vehicle from sunlight, dust, dirt and pollution.

Fits over factory roll bar. Waterproof.

Model	Year	Color	Replaces Part #
CJ-7	1976-86	Gray	**CC10009**

TIRE COVERS

Protects your spare tire from the elements.

Tire Size	Color	Replaces Part #
27″ to 29″	Black	**TC272901**
27″ to 29″	Gray	**TC272909**
27″ to 29″	Black Denim	**TC272915**
27″ to 29″	Spice	**TC272937**
30″ to 32″	Black	**TC303201**
30″ to 32″	Gray	**TC303209**
30″ to 32″	Black Denim	**TC303215**
30″ to 32″	Spice	**TC303237**
33″ to 35″	Spice	**TC333537**
33″ to 35″	Black Diamond	**TC333515**

WINDSHIELD CHANNEL

Connects soft top to windshield frame.

Model	Year	Comments	Replaces Part #
CJ-5, 7, 8	1976-86	Drill In	**5120901**

Copyright © 2014 Crown Automotive Sales Co., Inc. All rights reserved.

HEAVY DUTY GREASABLE SHACKLE KITS

Improve the performance, durability, and look of your suspension with RT Off-Road's Heavy Duty Shackle Kit. The shackle plates and reinforcement sleeves are finished in a rich black powder coat. Installation is as simple as removing the factory shackle assemblies and installing the supplied shackles.

Model	Year	Location	Lift	Replaces Part #
CJ-5, 7, 8	1976-86	Rear	3/4"	**RT64001**
CJ-3B, 5, 6	1953-75	F or R	3/4"	**916646HD**
Pickup	1947-65	Front	3/4"	**916646HD**
Sedan Delivery	1948-63	Front	3/4"	**916646HD**
Station Wagon	1946-64	Front	3/4"	**916646HD**

HEAVY DUTY STEERING SHAFTS

Fits all available models. For vehicles equipped with power or manual steering. 34.75" fully Extended. Eliminates factory cup assembly and replaces it with a U-Joint. Will not work on vehicles with large body lifts.

Model	Year	Comment	Replaces Part #
CJ-5, 6, 7, 8	1972-86	Manual Steering	**5353135HD**
CJ-5, 7, 8	1976-86	Power Steering	**5354934HD**

HEAVY DUTY DUAL DIAPHRAGM BRAKE BOOSTER & HIGH PRESSURE MASTER CYLINDER KITS

These heavy duty power brake conversion kits convert a single diaphragm booster to a dual diaphragm setup which creates more stopping power with less pedal pressure.

4 Wheel Disc Brakes or Aftermarket Axles

Model	Years	MC Bore Size	Replaces Part #
CJ-5, 7, 8	1976-86	1-1/8"	**DDB1**

Stock Applications

Model	Years	MC Bore Size	Replaces Part #
CJ-5, 7, 8	1976-86	1"	**DDB2**

STAINLESS STEEL BRAKE LINE KIT

RT Off-Road Stainless Steel Brake lines are designed for modified vehicles requiring additional length and performance. The additional length and stainless construction provides long lasting performance on modified vehicles. All brake lines are D.O.T. approved, 50 state legal.

Model	Year	Comment	Replaces Part #
CJ-7, 8	1982-86	Up to 4" Lift	**7405**

WHEEL SPACER KIT

RT Off-Road's new Wheel Spacers are made from 1.5" thick 6061 T6 aluminum. These hub-centric and wheel-centric spacers are anodized blue for a long worry-free life. They come with Grade 8 studs pressed into the spacers, 10 lug nuts and thread locking compound. These will give you the aggressive look and improved stability you are looking for without breaking the bank on new wheels.

Model	Year	Comments	Replaces Part #
CJ-5, 7, 8	1976-86	5 x 5.5" Bolt Pattern; 4.2" Center Bore	**WS555**

HALOGEN LAMP CONVERSION KITS

Convert from conventional OEM sealed beam headlamps to halogen lamps, bulbs included. Blue bulbs also available.

Model	Year	Comment	Replaces Part #
CJ-5, 6, 7, 8	1969-86	7" Round	**HC1000**
SJ, J-Series	1979-91	200MM Rectangular	**HC2000**

Copyright © 2014 Crown Automotive Sales Co., Inc. All rights reserved.

JERRY CANS

5-Gallon (20 Liter) Metal Safety Gas Tanks - Red and Olive Colors Include Plastic Spout. Paintable. EPA/CARB Compliant.

Description	Replaces Part #
Red Jerry Can	**11010R**
Olive Jerry Can	**11010M**
Mounting Bracket	**D8007**

5-Gallon Water Can Has USDA Food Grade Liner (Not for Fuel)

Description	Replaces Part #
Blue Water Can	**11010W**

AIR SCOOP

Increase the efficiency of your heater and air conditioner. Improve airflow through your vents with this dark smoke acrylic air scoop. No drilling required.

Model	Year	Replaces Part #
CJ-5, 7, 8	1976-86	**5305**

FIRE EXTINGUISHER HOLDER

Handy Fire Extinguisher Holder attaches to any roll bar or sports bar up to 3" diameter. Holds a 3 lb. extinguisher (not included). Attaches with 3 adjustable hook & loop fasteners. Available in red only.

Model	Replaces Part #
All Vehicles	**FEHR**

GRAB BAR SETS

These deluxe handles feature moulded rubber handles with heavy duty vinyl & 3-hook & loop adjustable straps. Sold in pairs.

Model	Replaces Part #
All Vehicles	**9301DELUXE**

These economy handles have a vinyl covered foam grab with a 2-hook & loop adjustable straps. Sold in pairs.

Model	Replaces Part #
All Vehicles	**9301**

DOOR GRAB HANDLES

Includes 2 black nylon handles with rubber grips and an installation tool.

Model	Year	Replaces Part #
CJ-5, 7, 8	1976-86	**DH1001K**

D-RING AND RECEIVER KITS

Fits: All Models w/ 2" Class III Hitch
All Receivers are 2"

Description	Replaces Part #
Stainless Steel D-Ring - 3/4" (1)	**2546DST**
Zinc Plated Steel D-Ring - 3/4" (1)	**2546D**
Stainless Steel D-Ring - 5/8" (1)	**2546DST58**
Includes 1 Receiver and 3 D-Rings(3/4")	**2546K3**
Includes 1 Receiver and 2 D-Rings (3/4")	**2546K2**
Includes 1 Receiver and 1 D-Ring (3/4")	**2546**
Includes: 2 D-Rings (3/4")	**2546D2**

Also Available with Rubber Spacers to Eliminate Rattle.
See www.RTOffRoad.com for more information

Copyright © 2014 Crown Automotive Sales Co., Inc. All rights reserved.

VEHICLE RECOVERY KIT

The RT Off-Road Vehicle Recovery Kit is the most convenient collection of recovery items available. Be prepared and have the right tools ready.

Description	Replaces Part #
Complete Vehicle Recovery Kit	**RT45001**

DELUXE LOCKING CENTER CONSOLES

Features: Front & Rear Cup Holders, Spring Action Coin Organizer, Extra Large Armrest, Removable Cooler holds a Six-Pack, Large Locking Storage Area for CD's and Valuables with a Concealed Sunglasses Holder.

Model	Year	Color	Replaces Part #
CJ-5, 7, 8	1976-86	Gray	**CLC10011**
CJ-5, 7, 8	1976-86	Spice	**CLC10017**
CJ-5, 7, 8	1976-86	Black	**CLC10015**

CLINOMETER

RT Off-Road's new clinometers are an awesome way of ensuring that you and your passengers are safer while off-road. They include a roll gauge which will tell you how off-camber you are at all times, along with a pitch gauge which will show how steep of an incline or decline you're conquering. These clinometers are easy to install and adjust using the included adhesive backed base. Fits all vehicles.

Description	Replaces Part #
Roll and Pitch Gauge with CJ Graphics	**791005**

TOW HOOK KITS

Model	Years	Color	Replaces Part #
CJ-5, 6, 7, 8	1955-86	Chrome	**THC1**
CJ-5, 6, 7, 8	1955-86	Black	**THB1**

FRONT BUMPERS

54" Stainless Steel Front Racing Bumper with Holes

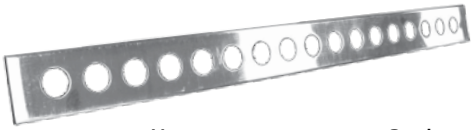

Model	Years	Replaces Part #
CJ-5, 6, 7, 8	1955-86	**488429**

Stainless Steel Front Bumpers

Model	Years	Replaces Part #
CJ-5, 6, 7, 8	1955-86	**488430**

BUMPERETTES

Kit Includes: 2 Bumperettes (Left & Right) and all necessary hardware.

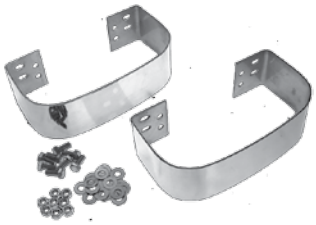

Model	Years	Color	Replaces Part #
CJ-5, 6, 7, 8	1976-86	Stainless	**488438**

FRONT FRAME COVER

Model	Years	Color	Replaces Part #
CJ-5, 7, 8	1976-86	Stainless	**488444**

Copyright © 2014 Crown Automotive Sales Co., Inc. All rights reserved.

ENTRY GUARDS (PAIR)

Model	Color	Years	Replaces Part #
CJ-5, 6	Stainless	1955-83	**488415**
CJ-7, 8	Stainless	1976-86	**488416**
CJ-7, 8	Black	1976-86	**488616**

FUEL NECK PROTECTOR

Model	Years	Color	Replaces Part #
CJ-5, 7, 8	1978-86	Stainless	**5463803ST**

TAILGATE TIRE STOPS

Model	Color	Years	Replaces Part #
CJ-7, 8	Stainless	1976-86	**7414**
CJ-7, 8	Black	1976-86	**488414B**

DOOR HINGES

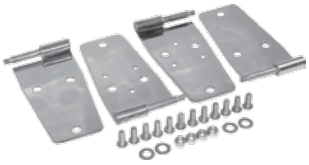

Model	Color	Comments	Years	Replaces Part #
CJ-5, 7, 8	Stainless	4 Hinges	1976-86	**488420**
Fits Full or Half Doors				

Lower Door Hinge Brackets

Model	Color	Years	Replaces Part #
CJ-5, 6, 7, 8	Stainless	1955-86	**488407**
CJ-5, 6, 7, 8	Black	1955-86	**488607**

LOWER TAILGATE HINGES

Model	Color	Years	Replaces Part #
CJ-7, 8	Stainless	1976-86	**488419**

LIFTGATE HINGES

Model	Color	Years	Replaces Part #
CJ-7	Stainless	1977-86	**488421**

HOOD VENT COVERS

Model	Years	Color	Replaces Part #
CJ-5, 7, 8	1978-86	Stainless	**488406**
CJ-5, 7, 8	1978-86	Black	**488606**

COMPLETE HOOD SETS

Model	Years	Color	Replaces Part #
CJ-5, 7, 8	1978-86	Stainless	**488499**
CJ-5, 7, 8	1978-86	Black	**488699**

HOOD HINGES

Model	Color	Years	Replaces Part #
CJ-5, 6, 7, 8	Stainless	1955-86	**488402**

HOOD CATCH KITS

Two required, fits left or right.

Model	Years	Color	Replaces Part #
All CJ's	1941-86	Chrome	**HC1**
All CJ's	1941-86	Stainless	**HC3**
All CJ's	1941-86	Black	**HC2**
The Following Item is Sold Only In Pairs			
All CJ's	1941-86	Stainless	**488401**

Copyright © 2014 Crown Automotive Sales Co., Inc. All rights reserved.

CHROME GRILLE COVERS

Fits all available models. Installs directly over factory grille using double face tape and screws.

Model	Years	Replaces Part #
CJ-5, 6, 7, 8	1972-86	**5752247STK****
CJ-5, 6, 7, 8	1972-86	**5752247ST***

* Stainless Steel Construction

** Stainless Steel Grille with Chrome Headlight Bezels

BUG SCREENS

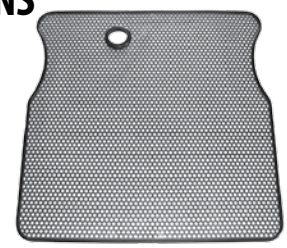

Model	Years	Color	Replaces Part #
CJ-5, 6, 7, 8	1955-86	Stainless	**488410**
CJ-5, 6, 7, 8	1955-86	Black	**488619**

STONE GUARD SETS

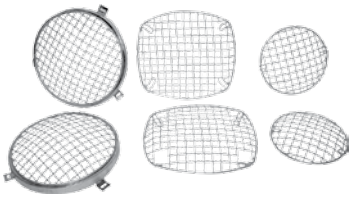

Model	Years	Color	Replaces Part #
CJ-5, 7, 8	1976-86	Stainless	**488424**
CJ-5, 7, 8	1976-86	Chrome	**488502**

TAIL LAMP GUARDS **Euro Style**

Model	Year	Color	Replaces Part #
CJ-5, 7, 8	1976-86	Black	**8660**
CJ-5, 7, 8	1976-86	Stainless	**8660ST**
CJ-5, 7, 8	1976-86	Titanium	**8660TI**

WINDSHIELD HINGES

Model	Color	Years	Replaces Part #
CJ-5, 7, 8	Stainless	1976-86	**488403**
CJ-5, 7, 8	Black	1976-86	546242425K

LIGHT BAR

Model	Years	Color	Replaces Part #
CJ-7, 8	1976-86	Stainless	**488443**

WINDSHIELD TIE DOWN KITS

Model	Years	Color	Replaces Part #
CJ-5, 6, 7, 8	1955-86	Stainless	**488411**
CJ-5, 6, 7, 8	1955-86	Black	**488611**

STAINLESS STEEL FOOTMAN LOOP

Model	Year	Replaces Part #
CJ-5, 6, 7, 8	1955-86	**488423**

WINDSHIELD LIGHT MOUNT BRACKETS

Model	Color	Years	Replaces Part #
CJ-5, 7, 8	Stainless	1976-86	**488489**
CJ-5, 7, 8	Black	1976-86	**488609**

Copyright © 2014 Crown Automotive Sales Co., Inc. All rights reserved.

MIRRORS

Front Windshield Hinge Mounting

Model	Color	Years	Comment	Replaces Part #
CJ-5, 6, 7, 8	Stainless	1955-86	Set	**5751193STK**

Side Windshield Hinge Mounting

Model	Color	Years	Comments	Replaces Part #
CJ-5, 7, 8	Stainless	1976-95	Set	**488418**
CJ-5, 7, 8	Black	1976-95	Set	**488618**

Safari Mirrors (8" X 6")

Mounts directly to door hinge for use with doors off. Includes arm and hardware.

Model	Color	Years	Comments	Replaces Part #
CJ-5, 7, 8	Black	1976-86	Each	**SDM100**
CJ-5, 7, 8	Black	1976-86	Set	**SDM100K**

INTERIOR WINDSHIELD MOUNT BRACKETS

Model	Years	Color	Replaces Part #
CJ-5, 7, 8	1976-86	Stainless	**488408**
CJ-5, 7, 8	1976-86	Black	**488408B**

WINDSHIELD KNOBS

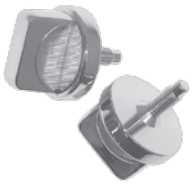

Model	Years	Color	Comments	Replaces Part #
CJ-5, 7, 8	1976-86	Chrome	Set of 2	**488527**

DASH KNOBS

Set of Six Knobs.

Model	Years	Color	Replaces Part #
CJ-5, 7, 8	1976-86	Black	**5459189BK**
CJ-5, 7, 8	1976-86	Aluminum, Billet	**5459189ALK**

STAINLESS STEEL DASH GRAB BAR

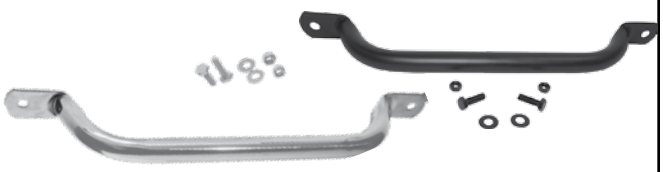

Model	Years	Color	Replaces Part #
CJ-5, 6, 7, 8	1955-86	Stainless	**488409**
CJ-5, 6, 7, 8	1955-86	Black	**488409B**

Copyright © 2014 Crown Automotive Sales Co., Inc. All rights reserved.

STAINLESS STEEL DASH OVERLAY

Model	Years	Color	Comments	Replaces Part #
CJ-5, 7, 8	1976-86	Stainless	w/Radio Opening	**488412**

STEERING COLUMN COVER, STAINLESS STEEL

Model	Years	Replaces Part #
CJ-5, 7, 8	1976-86	**488446**

ALUMINUM VALVE COVER KITS

All 81/86 Jeep® Vehicles w/ 4.2L Engine.
Includes: Gasket, Bridges, Grommets & Hardware.

Model	Years	Color	Replaces Part #
CJ-5, 7, 8	1981-86	Non-Painted	**83501398AL**
CJ-5, 7, 8	1981-86	Black	**83501398ALB**
SJ, J-Series	1981-86	Non-Painted	**83501398AL**
SJ, J-Series	1981-86	Black	**83501398ALB**

Notes:

Copyright © 2014 Crown Automotive Sales Co., Inc. All rights reserved.